STATE	PROJECT NUMBER	SHEET NO.	TOTAL SHEETS
GA.	CSSTP-M004-00(055)	10	16

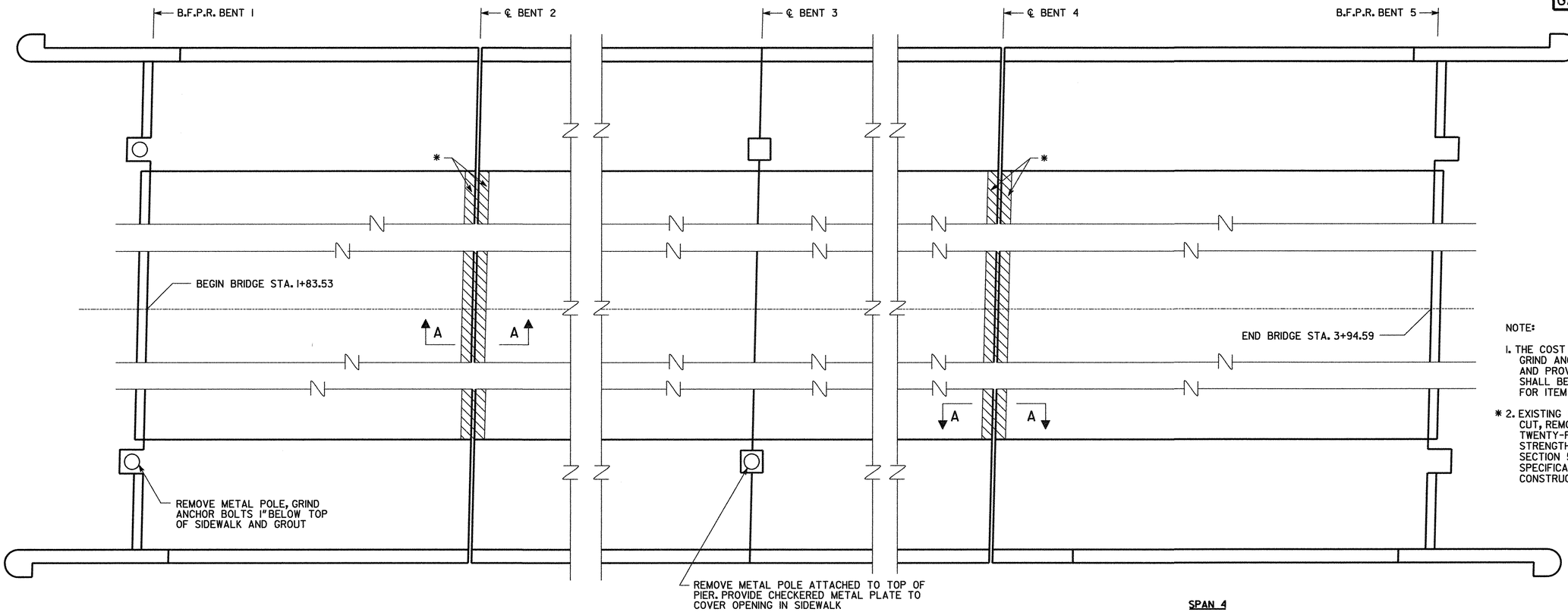

DECK PLAN

NOTE:

1. THE COST TO REMOVE METAL POLES, GRIND ANCHOR BOLTS, GROUT SIDEWALK AND PROVIDE CHECKERED METAL PLATE SHALL BE INCLUDED IN THE PRICE BID FOR ITEM 540-1202.

* 2. EXISTING CONCRETE DECK TO BE SAW CUT, REMOVED AND REPLACED WITH TWENTY-FOUR HOUR ACCELERATED STRENGTH CONCRETE IN ACCORDANCE WITH SECTION 504 OF THE GEORGIA DOT SPECIFICATIONS. FOR LIMITS OF PHASE CONSTRUCTION SEE DRAWING NO. 4.

LOCATION	NO. OF LOC.	MARK	LENGTH FT.	LENGTH IN.	NO. BARS REQ'D.	TYPE	AG	B FT.	B IN.	C FT.	C IN.	D FT.	D IN.	E FT.	E IN.	F FT.	F IN.	H FT.	H IN.	J FT.	J IN.	K FT.	K IN.	N	θ
SPAN 1, 2, 3 OR 4	4																								
		405	38	10	4	1																			
		406	1	9½	70	2		0	5½	0	8	0	8												

SUPERSTRUCTURE QUANTITIES

ITEM	SPAN 1, 2, 3 OR 4
CU YD 24-HR ACCELER CONC	1.0
LUMP - SUPERSTR REINF STEEL, LB	188

BRIDGE NO. 1

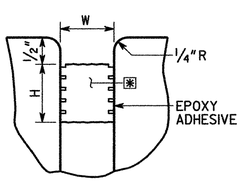

LONGITUDINAL SECTION

JOINT OPENING	
TEMPERATURE (°F)	W (IN.)
30	2¾"
60	2½"
90	2¼"

✱ SEAL AS PER GEORGIA DOT SPECIFICATIONS SECTION 449.2.D. SEAL SHALL BE 2½" (H) BY 3.13" WIDE PRIOR TO INSTALLATION.

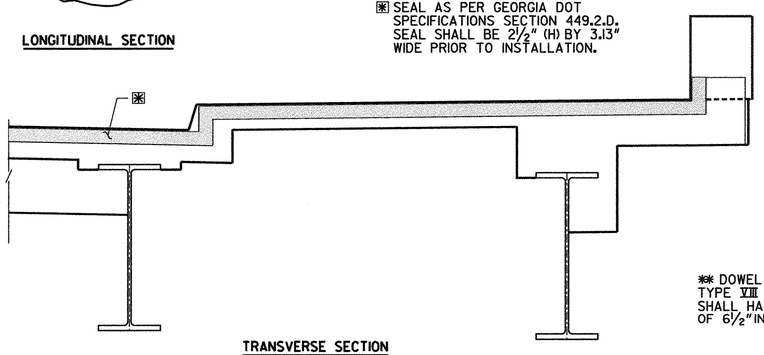

TRANSVERSE SECTION

EXPANSION JOINT DETAILS @ BENT 2 AND BENT 4

▨ - DENOTES CONCRETE TO BE REPLACED

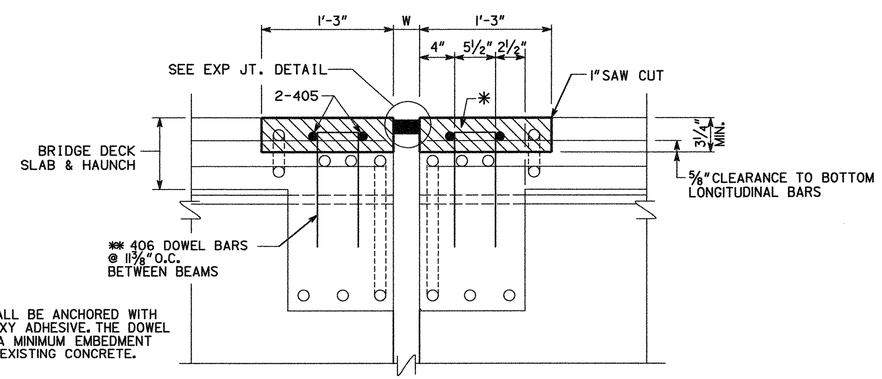

✱✱ DOWEL SHALL BE ANCHORED WITH TYPE VIII EPOXY ADHESIVE. THE DOWEL SHALL HAVE A MINIMUM EMBEDMENT OF 6½" INTO EXISTING CONCRETE.

SECTION A-A

(FOR DECK SECTION SEE DRAWING 4)

WilburSmith ASSOCIATES — ENGINEERS PLANNERS ECONOMISTS
2835 BRANDYWINE ROAD
SUITE 400
ATLANTA, GEORGIA 30341
(770) 936-8650

REVISIONS	DATE	BY
MODIFY SECTION A-A	8-13-10	TQT

GEORGIA
DEPARTMENT OF TRANSPORTATION
ENGINEERING DIVISION-OFFICE OF BRIDGE DESIGN

DECK PLAN
BRIDGE REHAB ON
CS 1002 (LEE STREET) OVER SR 402 (I-20)

FULTON COUNTY — CSSTP-M004-00(055)

SCALE: NO SCALE — APRIL 2010

DRAWING NO. 3 OF 7

DESIGNED AS — CHECKED TQT — REVIEWED CBB
DRAWN AS — DESIGN GROUP MAINTENANCE — APPROVED MLC

...\Engineering\plans\03deck.DGN 9/28/2010 3:16:55 PM