STATE	PROJECT NUMBER	SHEET NO.	TOTAL SHEETS
GA.	CSSTP-M003-00(071)	35	67

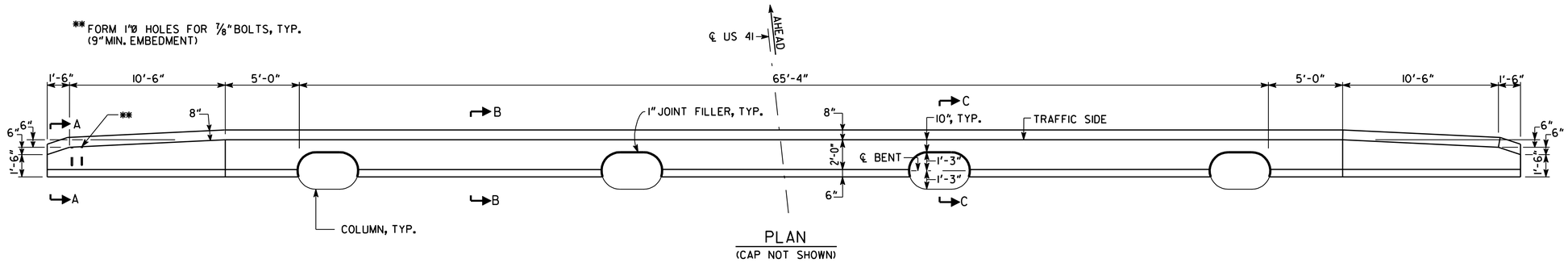

PLAN
(CAP NOT SHOWN)

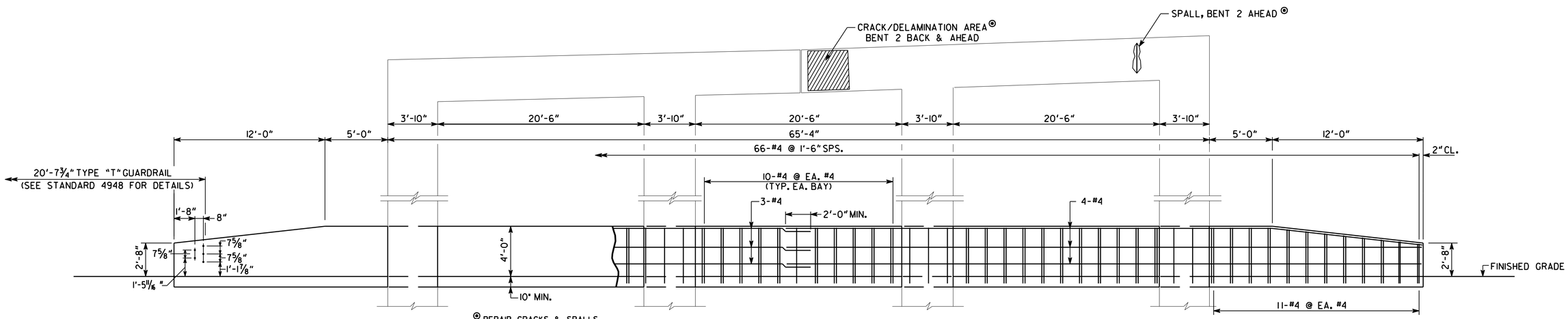

ELEVATION
(LOOKING AHEAD)

GENERAL NOTES, CONCRETE MEDIAN BARRIER TYPE 25 S MODIFIED

1. BASIS OF PAYMENT:
   ITEM 621 CONC. MEDIAN BARRIER, SPECIAL DESIGN NO 25 S MODIFIED LIN FT.

2. TYPE 25 S MODIFIED BARRIER SHALL BEGIN AND END WITH AN EXPANSION JOINT. JOINT REINFORCEMENTS SHALL BE SIMILAR TO STANDARD 4940 JOINTS. CONTRACTION JOINTS SHALL BE REQUIRED IN TYPE 25 S MODIFIED BARRIER WITH THE 20 FT. SPACING ADJUSTED AS NEEDED TO PROVIDE A UNIFORM APPEARANCE. STEEL SHALL BE CONTINUED THROUGH CONTRACTION JOINTS. EXPANSION JOINTS SHALL NOT BE WITHIN LIMITS OF TYPE 25 S MODIFIED BARRIER UNLESS APPROVED BY THE ENGINEERS.

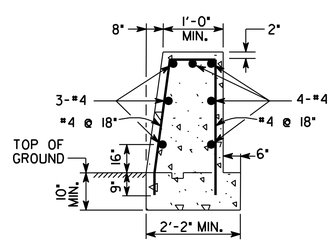

SECTION A-A

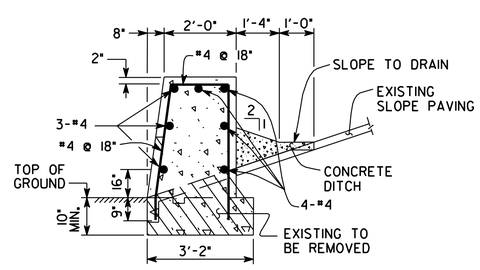

SECTION B-B

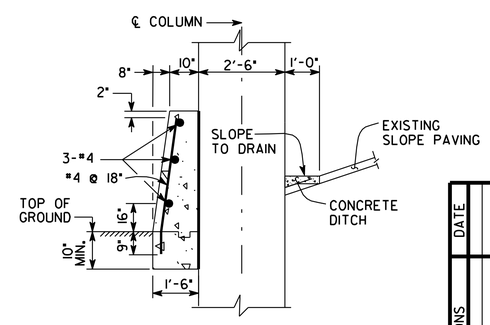

SECTION C-C

BRIDGE NO. 1

Hatch Mott MacDonald
2550 Heritage Ct, SE, Suite 250
Atlanta GA 30339-3062
(770) 952-1022

GEORGIA
DEPARTMENT OF TRANSPORTATION
ENGINEERING DIVISION-OFFICE OF BRIDGE AND STRUCTURES

BENT 2 DETAILS
BRIDGE DECK REPLACEMENT - SR 3/US 41
(COBB PARKWAY) OVER SR 280 (DELK ROAD)

COBB COUNTY — CSSTP-M003-00(071)

SCALE: NO SCALE — OCTOBER 2010

DESIGNED	PJC	CHECKED	SHG	REVIEWED	CBB
DRAWN	PJC	DESIGN GROUP	BMU	APPROVED	MLC

REVISIONS: DATE | BY

DRAWING NO. 35-11

BRIDGE SHEET 11 OF 14