STATE	PROJECT NUMBER	SHEET NO.	TOTAL SHEETS
GA.	CSSTP-M003-00(071)	33	67

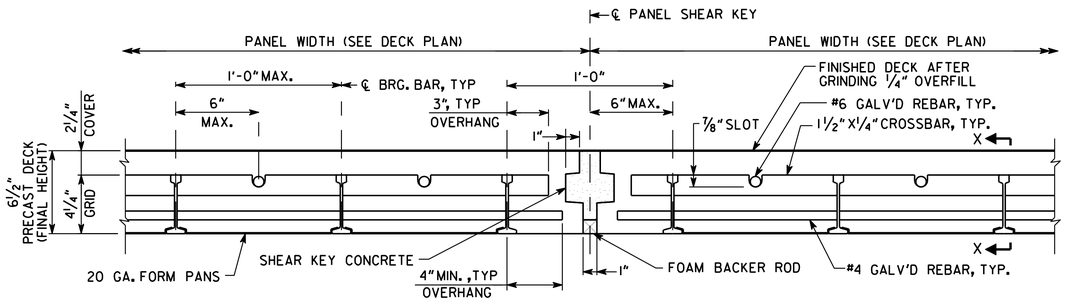

SECTION A-A

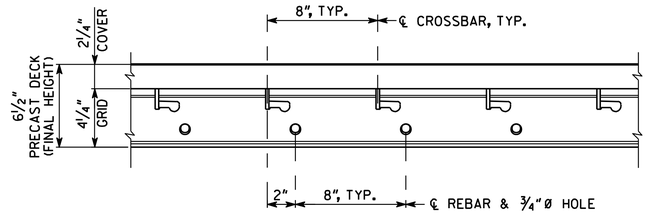

SECTION X-X

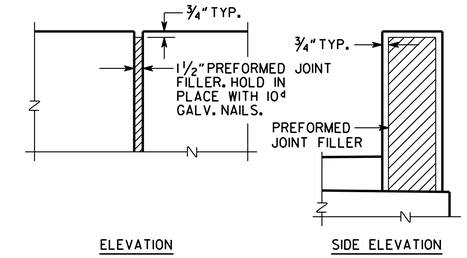

DETAIL OF EXPANSION JOINT IN PARAPET

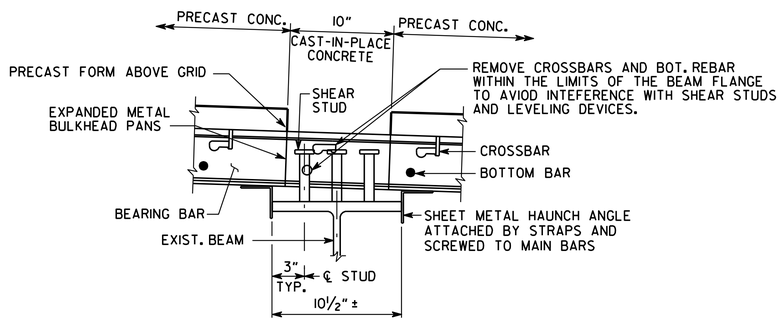

SECTION B-B

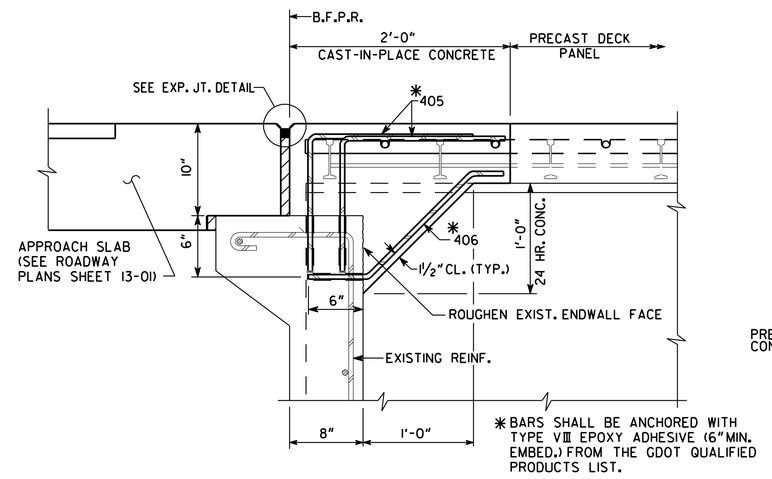

SECTION D-D

PLACE TRANSVERSE SIDEWALK MARKINGS ON SIDEWALK SPACED AT 5'-0"±.

INCLUDE COST OF BOND BREAKER AND EPOXY ADHESIVE IN PRICE BID FOR SUPERSTRUCTURE ITEMS.

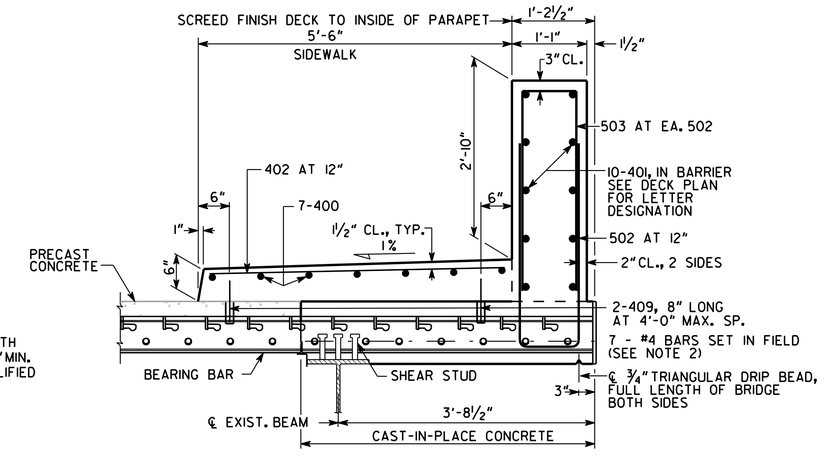

SECTION C-C

FENCE NOTES:

1. FENCE SHALL BE 9 GAGE CHAIN LINK ZINC COATED TWO INCH SECURITY FENCE.
2. CAST 4" DIA. SLEEVE IN THE PARAPET. ALLOW EPOXY ADHESIVE TO CURE FOR THREE DAYS BEFORE FENCE FABRIC IS INSTALLED.
3. PROVIDE EXPANSION SLEEVE FOR ALL RAILS TO MATCH SUPERSTRUCTURE JOINTS.
4. FOR POST SPACING, SEE BRIDGE SHEET 5.
5. FOR FURTHER DETAILS, SEE GEORGIA DOT SPECIFICATIONS SECTIONS 643 AND 894.
6. FASTEN FABRIC TO POSTS AT INTERVALS NOT GREATER THAN 14".

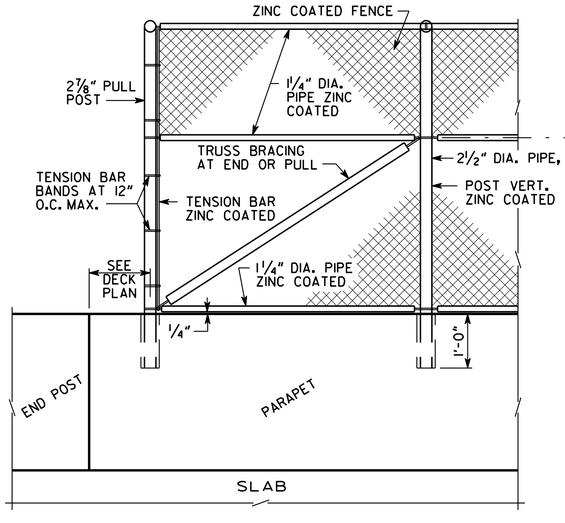

FENCE ELEVATION

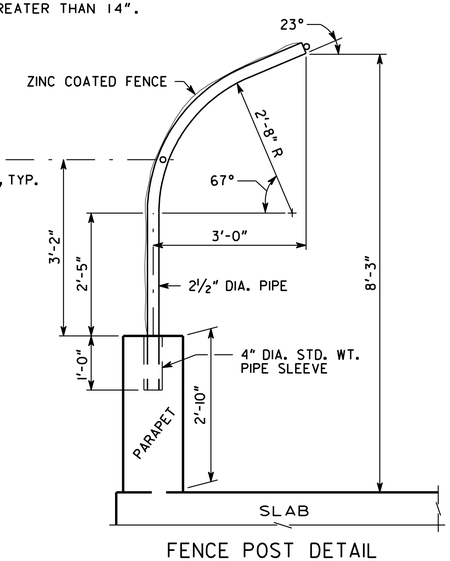

FENCE POST DETAIL

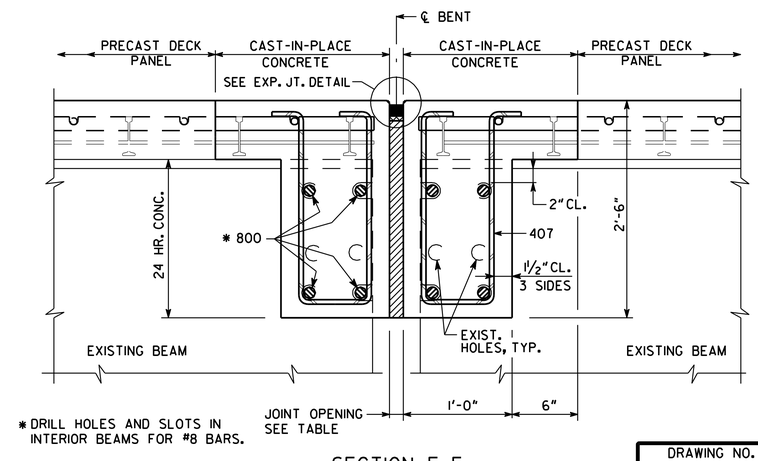

SECTION E-E

NOTES:

1. INCLUDE COST FOR ADHESIVE ANCHORS IN THE PRICE BID FOR REINFORCING STEEL.
2. INCLUDE COST FOR ADDITIONAL BARS IN THE PRICE BID FOR STEEL GRID DETAIL.

BRIDGE NO. 1

Hatch Mott MacDonald
2550 Heritage Ct, SE, Suite 250
Atlanta GA 30339-3062
(770) 952-1022

GEORGIA
DEPARTMENT OF TRANSPORTATION
ENGINEERING DIVISION-OFFICE OF BRIDGE AND STRUCTURES

PRECAST DECK PLAN DETAIL
BRIDGE DECK REPLACEMENT - SR 3/US 41 (COBB PARKWAY) OVER SR 280 (DELK ROAD)

COBB COUNTY — CSSTP-M003-00(071)

SCALE: NO SCALE — OCTOBER 2010

DRAWING NO.	REVISIONS	BY	DATE
35-09			
BRIDGE SHEET 9 OF 14			

DESIGNED	PJC	CHECKED	SHG	REVIEWED	CBB
DRAWN	PJC	DESIGN GROUP	BMU	APPROVED	MLC