STATE	PROJECT NUMBER	SHEET NO.	TOTAL SHEETS
GA.	CSNHS-M003-00(054)	39	98

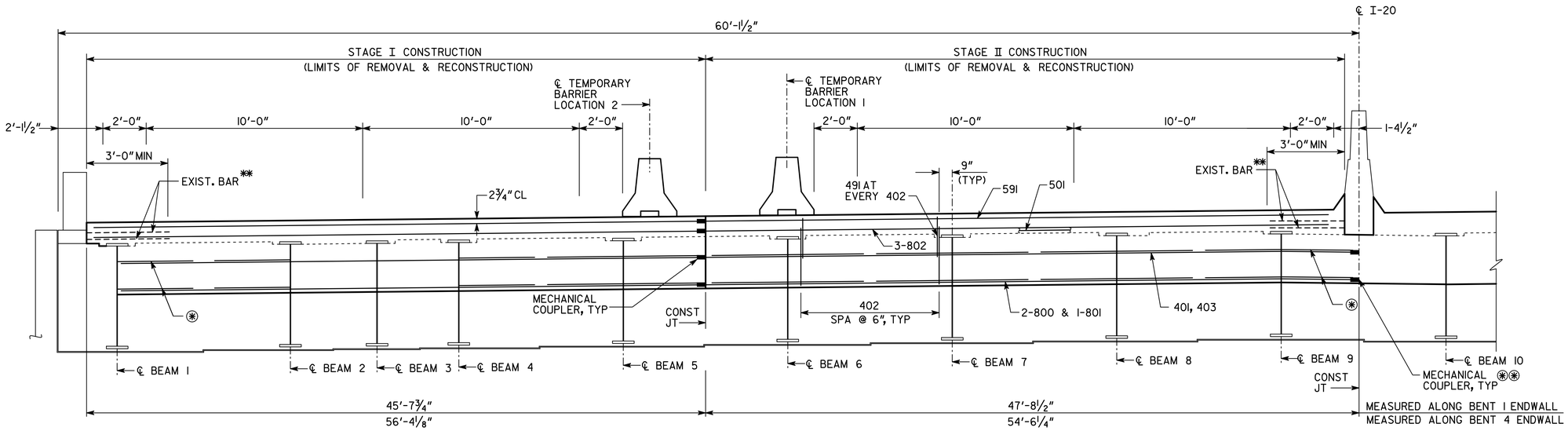

SECTION AT EDGE BEAM (BENTS 1 & 4)

(END BENT 4 SHOWN, I-20 WESTBOUND)

NOTE: SECTION SHOWN NORMAL TO ℄ I-20. EXISTING LONGITUDINAL DECK REIFORCING TO REMAIN. NOT SHOWN FOR CLARITY.

BENT 1	LT EDGE - BEAM 1	BEAM 1 - BEAM 2	BEAM 2 - BEAM 3	BEAM 3 - BEAM 4	BEAM 4 - BEAM 5	BEAM 5 - CONST JT	CONST JT - BEAM 6	BEAM 6 - BEAM 7	BEAM 7 - BEAM 8	BEAM 8 - BEAM 9	BEAM 9 - CONST JT
SPACING	2'-10¾"	12'-10 13/16"	6'-5 7/16"	5'-0 9/16"	12'-0 13/16"	6'-3 7/16"	5'-9 7/16"	12'-0 13/16"	12'-0 13/16"	12'-0 13/16"	5'-8 9/16"
BAR LENGTH		12'-6"	6'-1"	4'-8"	11'-8"	5'-11"	5'-5"	11'-8"	11'-8"	11'-8"	5'-4"
403 BAR		403A	403B	403C	403D	403B	403E	403D	403D	403D	403E
800 BAR		800A	800B	800C	800D	800B	800E	800D	800D	800D	800E
NO 402 BARS		26	14	11	25	13	12	25	25	25	12

NOTE: DIMENSIONS ARE ALONG BENT.

BENT 4	LT EDGE - BEAM 1	BEAM 1 - BEAM 2	BEAM 2 - BEAM 3	BEAM 3 - BEAM 4	BEAM 4 - BEAM 5	BEAM 5 - CONST JT	CONST JT - BEAM 6	BEAM 6 - BEAM 7	BEAM 7 - BEAM 8	BEAM 8 - BEAM 9	BEAM 9 - CONST JT
SPACING	1'-9 11/16"	15'-2 9/16"	7'-7 5/16"	16'-1¾"	12'-9 13/16"	2'-9"	10'-0 13/16"	12'-9 13/16"	12'-9 13/16"	12'-9 13/16"	6'-0"
BAR LENGTH		14'-10"	7'-3"	15'-9"	12'-5"	2'-5"	9'-8"	12'-5"	12'-5"	12'-5"	5'-8"
403 BAR		403A	403B	403J	403C	403D	403E	403C	403C	403C	403H
800 BAR		800A	800B	800J	800C	800D	800E	800C	800C	800C	800H
NO 402 BARS		31	16	33	26	6	21	26	26	26	13

NOTE: DIMENSIONS ARE ALONG BENT.

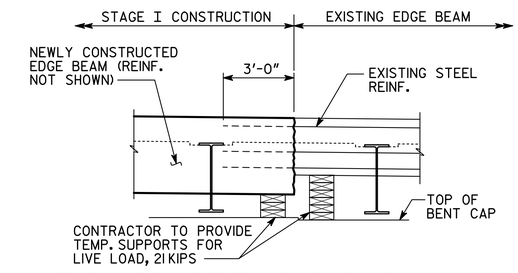

TEMP. CONDITION BETWEEN STAGES I & II CONST.

NOTES:

⊛ 1"Ø SWEDGED BOLT. SEE DETAIL ON MISC. DETAIL SHEET. AS AN ALTERNATE TO THE SWEDGED BOLT AT INTERIOR GIRDERS, THE CONTRACTOR MAY CUT A HOLE IN THE WEB AND PROVIDE CONTINUOUS REINFORCEMENT AT NO ADDITIONAL COST TO THE DEPARTMENT.

⊛⊛ THE CONSTRUCTION JOINT AND MECHANICAL COUPLERS MAY BE ELIMINATED AT THIS LOCATION IF STAGE II EASTBOUND AND WESTBOUND IS CONSTRUCTED SIMULTANEOUSLY.

** CARE SHALL BE EXERCISED SO THAT EXISTING REINFORCING STEEL IS NOT DAMAGED.

ALL BEAMS ARE EXISTING.

WORK THIS DRAWING WITH MISC. DETAILS SHEET.

CONTRACTOR SHALL VERIFY ALL DIMENSIONS BEFORE CONSTRUCTION.

BRIDGE NO. 2

ATKINS

GEORGIA
DEPARTMENT OF TRANSPORTATION
ENGINEERING DIVISION - OFFICE OF BRIDGES AND STRUCTURES

EDGE BEAM SECTION BENTS 1 & 4 WB
SR 402 (I-20) OVER
CSX RR AND MARTA

FULTON COUNTY P.I. NO. M003054

SCALE: ⅜" = 1'-0" FEBRUARY 2014

DRAWING NO. 35-020

BRIDGE SHEET 6 OF 11

REVISIONS	BY	DATE

DESIGNED FAQ CHECKED DRB REVIEWED CBB
DRAWN CAB DESIGN GROUP BMU APPROVED JAD

2/19/2014
I:\s10003347 (gdot I-20 widen)\m003054 deck rehabs\121-017I-01\Sect 2A.dgn