STATE	PROJECT NUMBER	SHEET NO.	TOTAL SHEETS
GA.	CSNHS-M002-00(790)	98	125

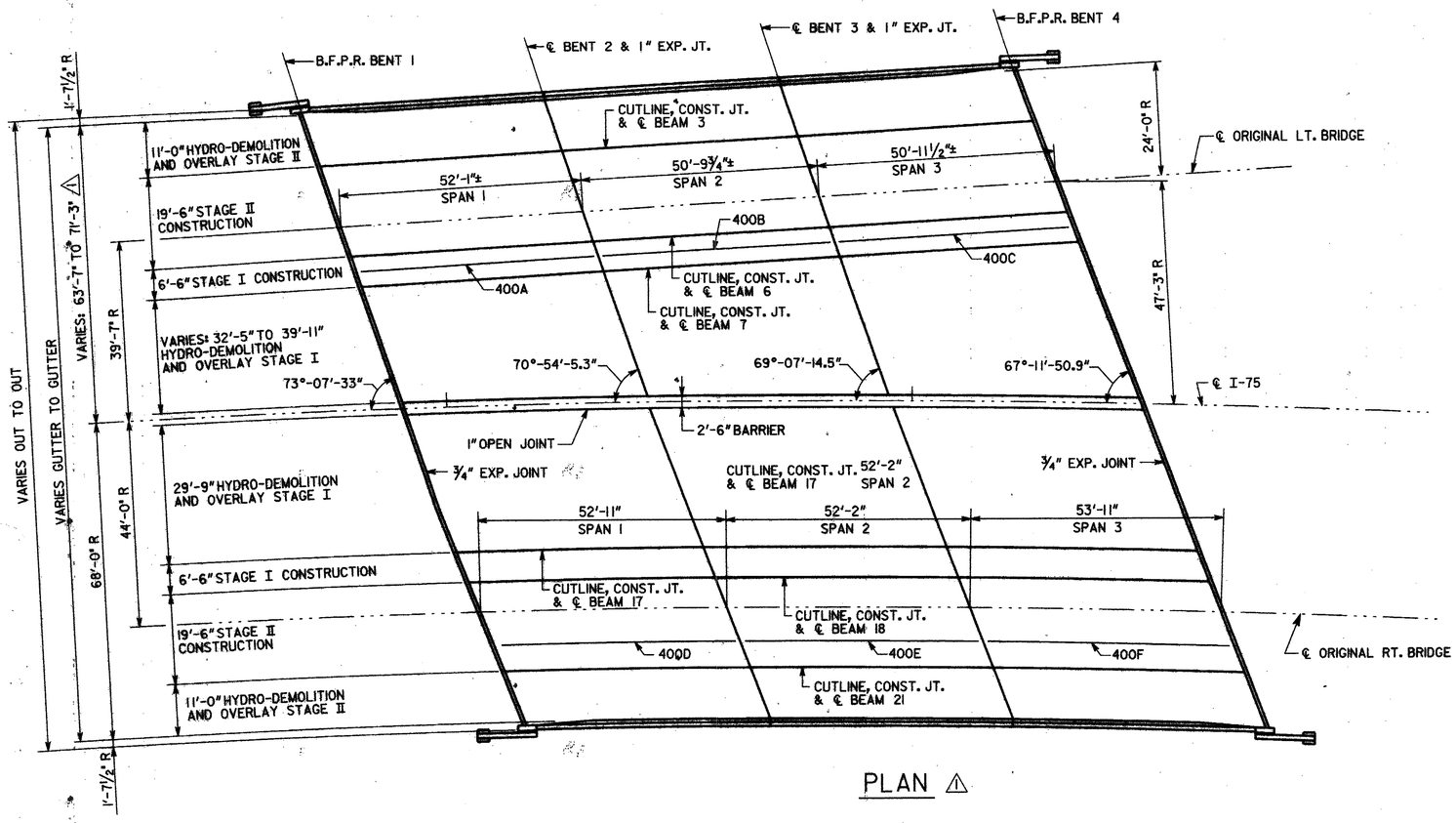

PLAN ⚠

LOCATION	JOINT OPENING (W)			
	W	TEMPERATURE		
		30°F	60°F	90°F
BENTS 1 & 4	1"	¾"	¾"	¾"
BENT 2	1¼"	1¼"	1"	¾"
BENT 3	1¼"	1⅛"	1"	⅞"

NOTE: W DENOTES SEAL WIDTH PRIOR TO INSTALLATION

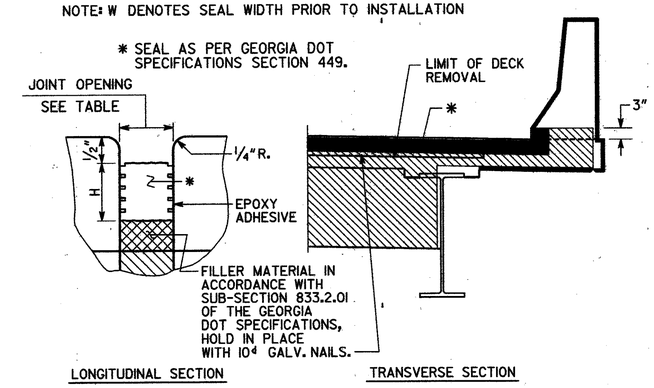

EXPANSION JOINT DETAILS

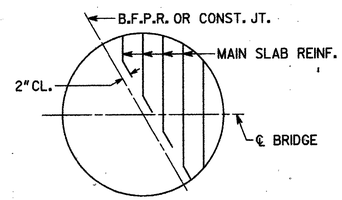

AT B.F.P.R. OR CONST. JOINT

BARS ARE DETAILED IN BAR DETAILS AS EQUIVALENT FULL LENGTH BARS.

BAR BENDING DETAILS AT SKEWED JOINTS

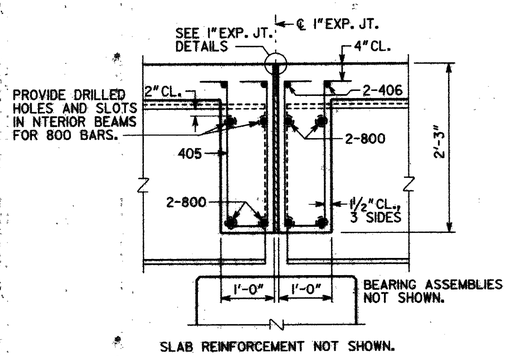

SLAB REINFORCEMENT NOT SHOWN.

SECTION A-A

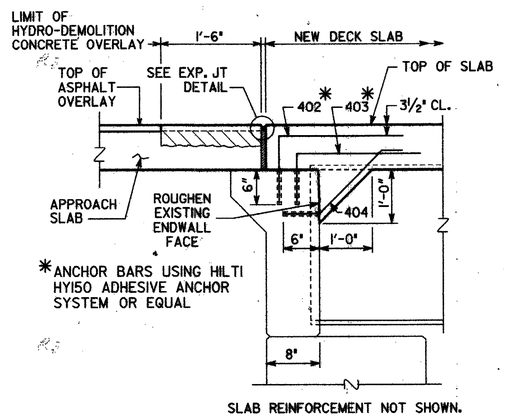

SLAB REINFORCEMENT NOT SHOWN.

SECTION B-B

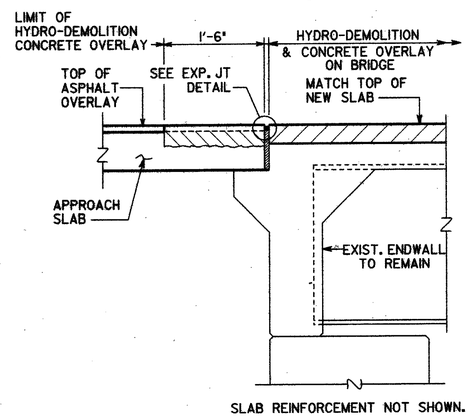

SLAB REINFORCEMENT NOT SHOWN.

SECTION C-C

BRIDGE NO. 5 LT. & RT.

JBT J.B. Trimble, Inc.
6445 Powers Ferry Road
Atlanta GA 30339-2933
(770) 952-1022

GEORGIA
DEPARTMENT OF TRANSPORTATION
OPERATIONS DIVISION-OFFICE OF MAINTENANCE

DISTRICT 6 BRIDGE REPAIR
I-75 OVER SR 146
DECK PLAN

CATOOSA COUNTY — CSNHS-M002-00(790)

SCALE: NO SCALE U.N.O. — SEPTEMBER 2005

REVISIONS	BY	DATE
DETAILS	GLE	10-31-05

BRIDGE SHEET 5 OF 8

DESIGNED SHG — CHECKED GLE — REVIEWED BFR
DRAWN ITD — DESIGN GROUP MAINTENANCE — APPROVED BFR

11/8/2005

m:\tra\3I-4085 bridge maint, deck rehab\nhs-m002-00(790) catoosa co\dgn\bridge\3I-4085(790)catoosa(br5)\2790b5dp.dgn