STATE	PROJECT NUMBER	SHEET NO.	TOTAL SHEETS
GA.	CSNHS-M002-00(790)	91	125

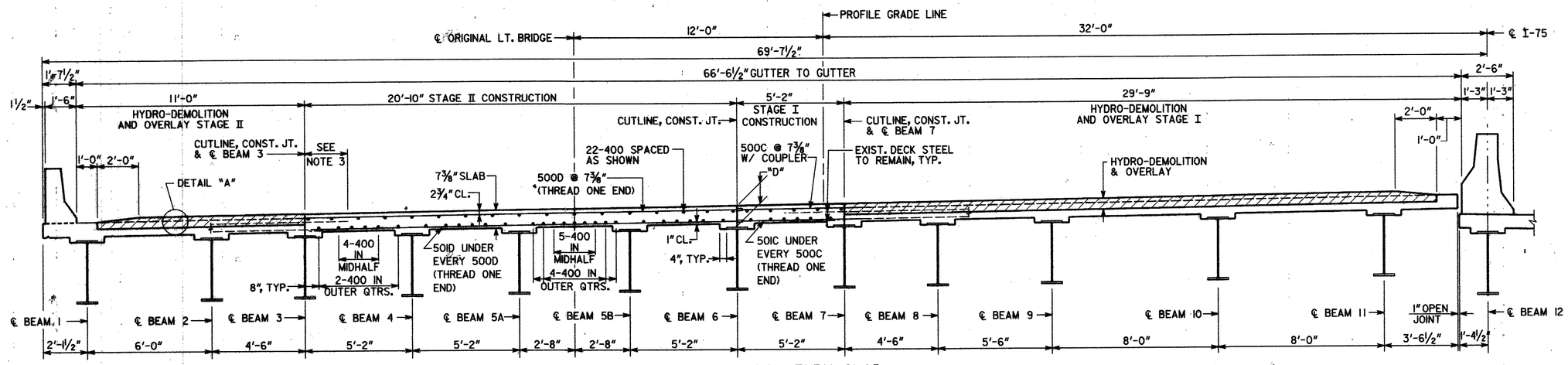

PARTIAL SECTION THRU SLAB

LEFT BRIDGE SHOWN (LOOKING AHEAD)
RIGHT BRIDGE SIMILAR (LOOKING BACK)

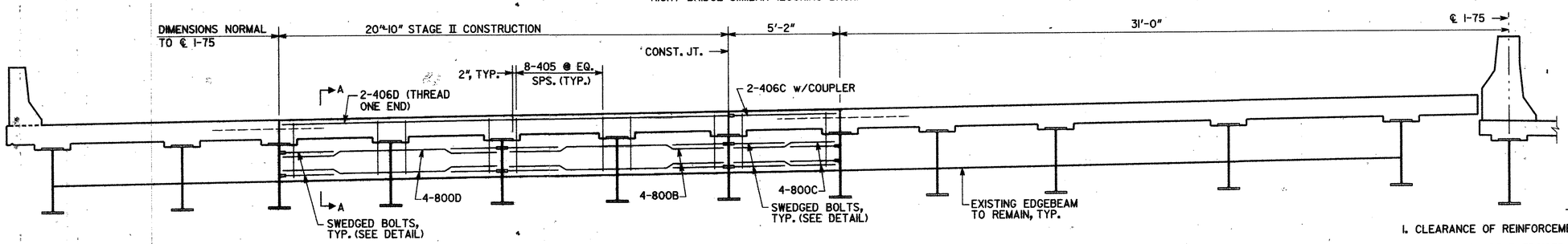

⚠ PARTIAL SECTION THRU EDGEBEAM

LEFT BRIDGE SHOWN (LOOKING AHEAD)
RIGHT BRIDGE SIMILAR (LOOKING BACK)

LEFT BRIDGE	
BEAM DEFLECTIONS	
SPAN	ΔNC
1	5/16"
2	5/16"
3	1 1/16"
4	3/8"
5	3/8"
6	3/8"

RIGHT BRIDGE	
BEAM DEFLECTIONS	
SPAN	ΔNC
1	5/16"
2	5/16"
3	1 1/16"
4	5/16"
5	5/16"
6	3/8"

ΔNC = DEFLECTION DUE TO WEIGHT OF SLAB, COPING, EDGEBEAMS AND FORMS AT MIDSPAN.

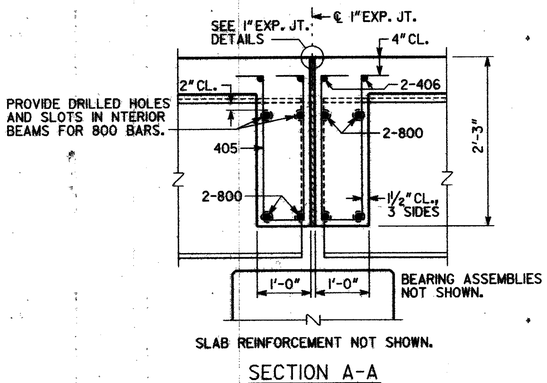

SECTION A-A

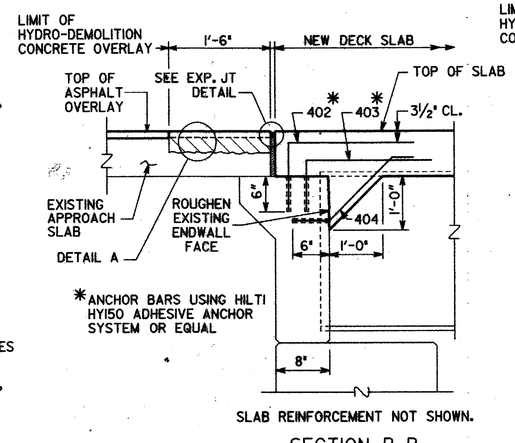

SECTION B-B

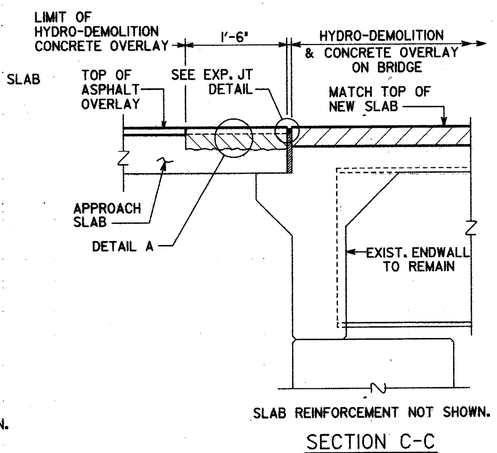

SECTION C-C

NOTES

1. CLEARANCE OF REINFORCEMENT IS 2" UNLESS NOTED OTHERWISE.
2. CARE SHALL BE EXERCISED IN REMOVAL OF EXISTING CONCRETE TO MAKE CUTS VERTICAL AND TO RETAIN EXISTING REINFORCEMENT. EXISTING REINFORCEMENT BARS TO BE SPLICED INTO NEW WORK SHALL EXTEND A MINIMUM OF 1'-10" INTO NEW SECTION. ANY EXISTING REINFORCEMENT STEEL DAMAGED DURING REMOVAL SHALL BE REPLACED BY THE CONTRACTOR AT NO ADDITIONAL COST.
3. NON-CONTACT LAPS MAY BE USED BETWEEN EXISTING AND NEW TRANSVERSE DECK BARS.
4. PROVIDE MECHANICAL COUPLER IN ACCORDANCE WITH SPECIAL PROVISIONS. COST FOR COUPLERS SHALL BE INCLUDED IN THE PRICE BID FOR SUPERSTR. REINF. STEEL.
5. DIMENSION "D" IS MEASURED FROM TOP OF SLAB TO TOP OF BEAM AT CENTERLINE OF BEARING. VARY "D" BETWEEN BEARINGS TO COMPENSATE FOR DEAD LOAD DEFLECTION AND VERTICAL CURVE. MAINTAIN CONSTANT SLAB THICKNESS AS SHOWN IN SECTIONS. DIMENSIONS SHOWN ARE BASED ON VALUES GIVEN ON ORIGINAL PLANS PLUS THE PROPOSED INCREASE IN DECK THICKNESS.

"D" = 8½"

BRIDGE NO. 4 LT. & RT.

JBT J.B. Trimble, Inc.
6445 Powers Ferry Road
Atlanta GA 30339-2933
(770) 952-1022

GEORGIA
DEPARTMENT OF TRANSPORTATION
OPERATIONS DIVISION-OFFICE OF MAINTENANCE

DISTRICT 6 BRIDGE REPAIR
I-75 OVER (M-1136) C.R. 10
DECK SECTION - SPAN 3

CATOOSA COUNTY — CSNHS-M002-00(790)

SCALE: NO SCALE U.N.O. — SEPTEMBER 2005

REVISIONS	BY	DATE
BAR DETAILS	GLE	10-31-05

BRIDGE SHEET 7 OF 9

DESIGNED MDT/SHG — CHECKED GLE — REVIEWED BFR
DRAWN JTD — DESIGN GROUP MAINTENANCE — APPROVED BFR

11/8/2005

m:\tra\31-4085 bridge maint, deck rehab\nhs-m002-00(790) catoosa co\dgn\bridge\31-4085(790)catoosa(br4)\2790b4ds2.dgn