STATE	PROJECT NUMBER	SHEET NO.	TOTAL SHEETS
GA.	CSNHS-M002-00(790)	75	125

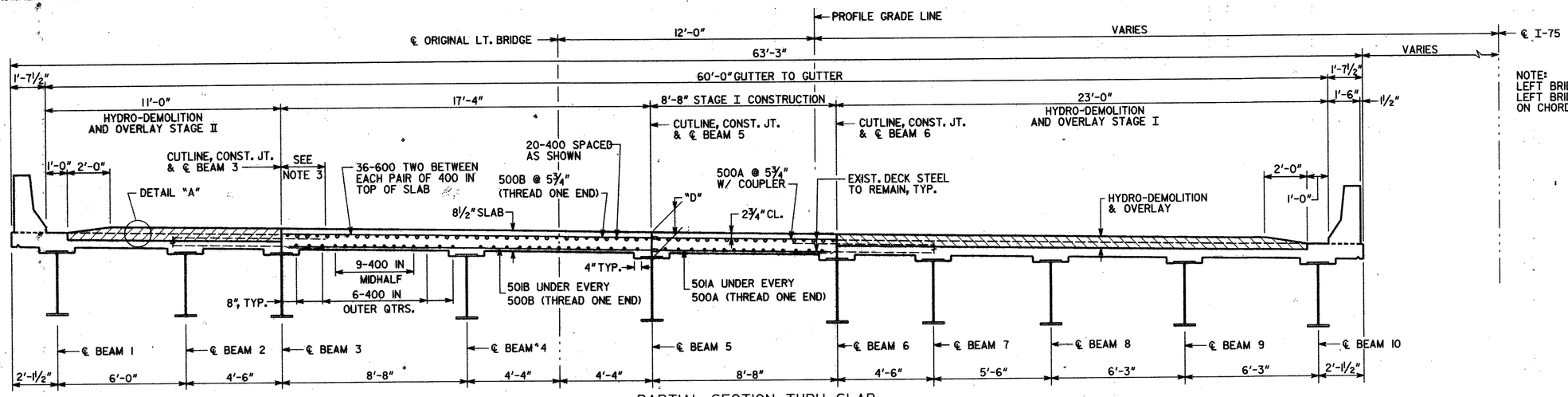

NOTE:
LEFT BRIDGE DIMENSIONS ARE RADIAL.
LEFT BRIDGE BEAM SPACES ARE BASED ON CHORD OFFSETS FROM BEAMS 3 AND 6.

PARTIAL SECTION THRU SLAB

LEFT BRIDGE SHOWN (LOOKING AHEAD)
RIGHT BRIDGE SIMILAR

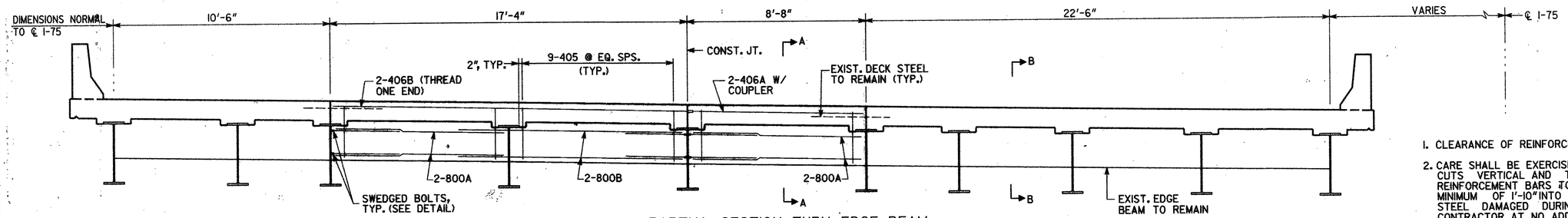

PARTIAL SECTION THRU EDGE BEAM

LEFT BRIDGE SHOWN (LOOKING AHEAD)
RIGHT BRIDGE SIMILAR

NOTES

1. CLEARANCE OF REINFORCEMENT IS 2" UNLESS NOTED OTHERWISE.
2. CARE SHALL BE EXERCISED IN REMOVAL OF EXISTING CONCRETE TO MAKE CUTS VERTICAL AND TO RETAIN EXISTING REINFORCEMENT. EXISTING REINFORCEMENT BARS TO BE SPLICED INTO NEW WORK SHALL EXTEND A MINIMUM OF 1'-10" INTO NEW SECTION. ANY EXISTING REINFORCEMENT STEEL DAMAGED DURING REMOVAL SHALL BE REPLACED BY THE CONTRACTOR AT NO ADDITIONAL COST.
3. NON-CONTACT LAPS MAY BE USED BETWEEN EXISTING AND NEW TRANSVERSE DECK BARS.
4. PROVIDE MECHANICAL COUPLER IN ACCORDANCE WITH SPECIAL PROVISIONS. COST FOR COUPLERS SHALL BE INCLUDED IN THE PRICE BID FOR SUPERSTR. REINF. STEEL.
5. DIMENSION "D" IS MEASURED FROM TOP OF SLAB TO TOP OF BEAM AT CENTERLINE OF BEARING. VARY "D" BETWEEN BEARINGS TO COMPENSATE FOR DEAD LOAD DEFLECTION AND VERTICAL CURVE. MAINTAIN CONSTANT SLAB THICKNESS AS SHOWN IN SECTIONS. DIMENSIONS SHOWN ARE BASED ON VALUES GIVEN ON ORIGINAL PLANS PLUS THE PROPOSED INCREASE IN DECK THICKNESS.

"D" = 9 7/16" (LEFT BRIDGE)

"D" = 8 9/16" (BENTS 1, 2 & 4 RT.)

"D" = 8¾" (BENT 3 RT.)

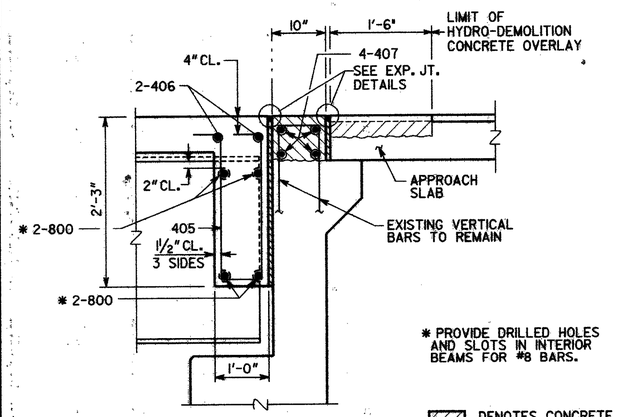

SECTION A-A

(BENTS 1 AND 4)

* PROVIDE DRILLED HOLES AND SLOTS IN INTERIOR BEAMS FOR #8 BARS.

DENOTES CONCRETE TO BE REMOVED

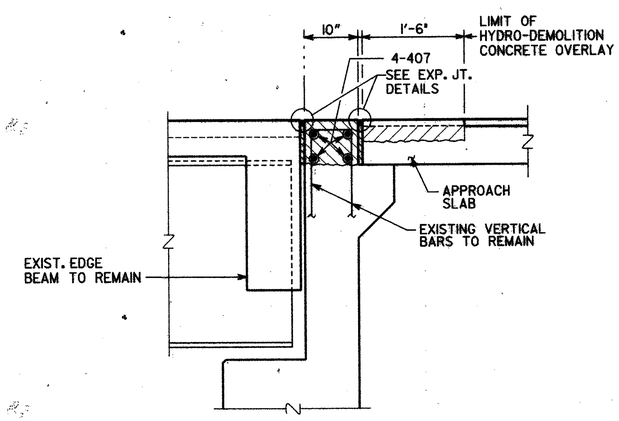

SECTION B-B

(BENTS 1 AND 4)

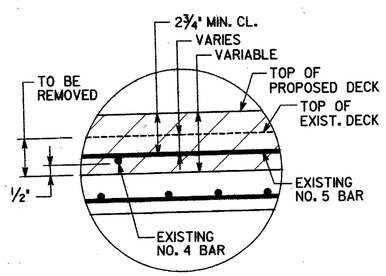

DETAIL "A"

NOTE: COST FOR SUPPLYING AND INSTALLING SLEEVE AND BOLT TO BE INCLUDED IN OVERALL BID PRICE SUBMITTED.

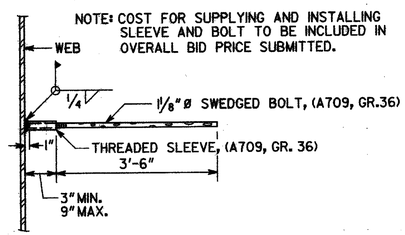

EDGE BEAM BAR LAP DETAIL

BRIDGE NO. 2 LT. & RT.

JBT
J.B. Trimble, Inc.
6445 Powers Ferry Road
Atlanta GA 30339-2933
(770) 952-1022

GEORGIA
DEPARTMENT OF TRANSPORTATION
OPERATIONS DIVISION-OFFICE OF MAINTENANCE

DISTRICT 6 BRIDGE REPAIR
I-75 OVER (M-1137) THREE NOTCH ROAD
DECK SECTION

CATOOSA COUNTY — CSNHS-M002-00(790)

SCALE: NO SCALE U.N.O. — SEPTEMBER 2005

REVISIONS	BY	DATE

DESIGNED MDT	CHECKED GLE	REVIEWED BFR	
DRAWN ITD	DESIGN GROUP MAINTENANCE	APPROVED BFR	

11/8/2005

BRIDGE SHEET 6 OF 8

m:\tra\31-4085 bridge maint, deck rehab\nhs-m002-00(790) catoosa co\dgn\bridge\31-4085(790)catoosa(br2)\2790b2ds.dgn