STATE	PROJECT NUMBER	SHEET NO.	TOTAL SHEETS
GA.	NHS-M002-00(789)	88	116

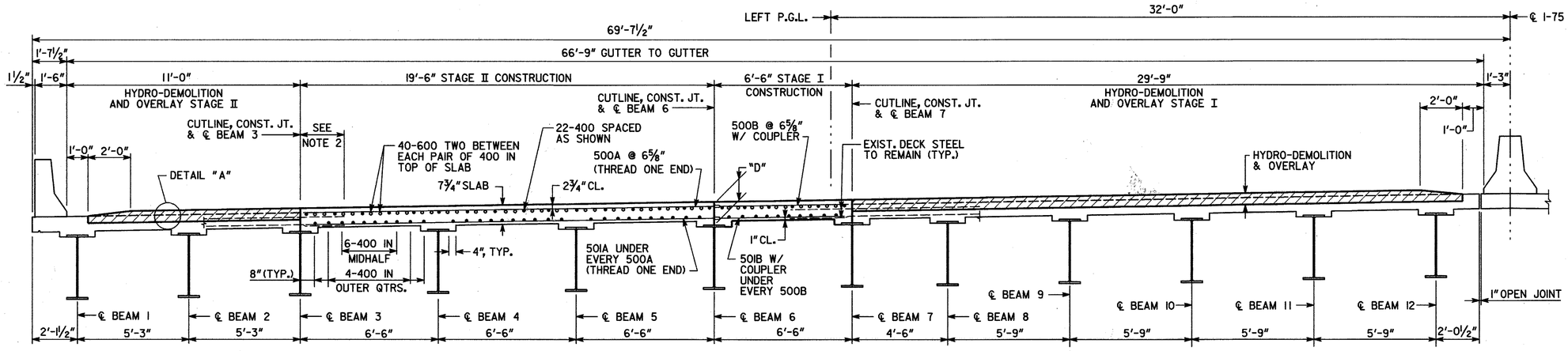

PARTIAL SECTION THRU SLAB

LEFT BRIDGE SHOWN (LOOKING AHEAD)
RIGHT BRIDGE SIMILAR (LOOKING BACK)

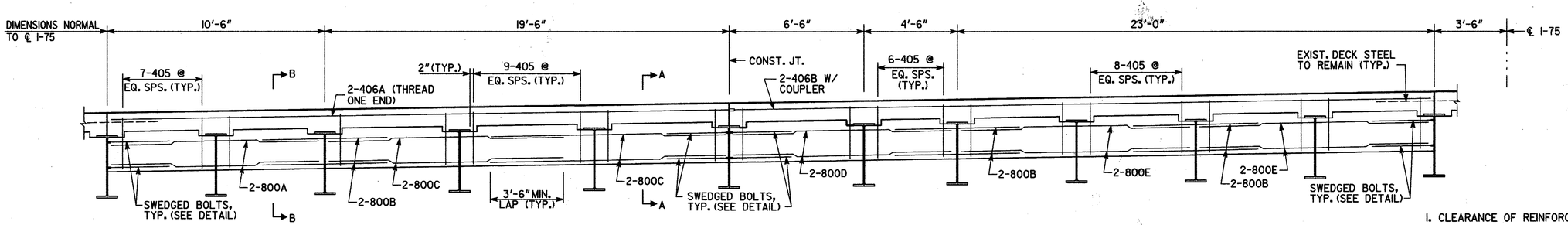

SECTION THRU EDGEBEAM

LEFT BRIDGE SHOWN (LOOKING AHEAD)
RIGHT BRIDGE SIMILAR (LOOKING BACK)

NOTES

1. CLEARANCE OF REINFORCEMENT IS 2" UNLESS NOTED OTHERWISE.
2. CARE SHALL BE EXERCISED IN REMOVAL OF EXISTING CONCRETE TO MAKE CUTS VERTICAL AND TO RETAIN EXISTING REINFORCEMENT. EXISTING REINFORCEMENT BARS TO BE SPLICED INTO NEW WORK SHALL EXTEND A MINIMUM OF 1'-10" INTO NEW SECTION. ANY EXISTING REINFORCEMENT STEEL DAMAGED DURING REMOVAL SHALL BE REPLACED BY THE CONTRACTOR AT NO ADDITIONAL COST.
3. NON-CONTACT LAPS MAY BE USED BETWEEN EXISTING AND NEW TRANSVERSE DECK BARS.
4. PROVIDE MECHANICAL COUPLER IN ACCORDANCE WITH SPECIAL PROVISIONS. COST FOR COUPLERS SHALL BE INCLUDED IN THE PRICE BID FOR SUPERSTR. REINF. STEEL.
5. DIMENSION "D" IS MEASURED FROM TOP OF SLAB TO TOP OF BEAM AT CENTERLINE OF BEARING. VARY "D" BETWEEN BEARINGS TO COMPENSATE FOR DEAD LOAD DEFLECTION AND VERTICAL CURVE. MAINTAIN CONSTANT SLAB THICKNESS AS SHOWN IN SECTIONS. DIMENSIONS SHOWN ARE BASED ON VALUES GIVEN ON ORIGINAL PLANS PLUS THE PROPOSED INCREASE IN DECK THICKNESS.

"D" = BENTS 1 & 5 = 8⅝" BENTS 2, 3 & 4 = 9¼"

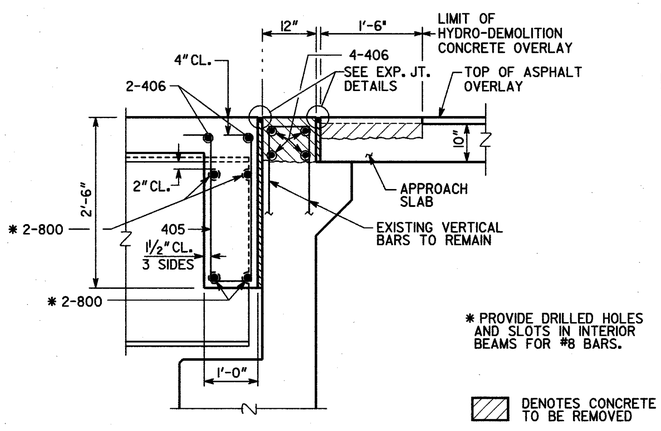

SECTION A-A

(BENTS 1 AND 5)

* PROVIDE DRILLED HOLES AND SLOTS IN INTERIOR BEAMS FOR #8 BARS.

DENOTES CONCRETE TO BE REMOVED

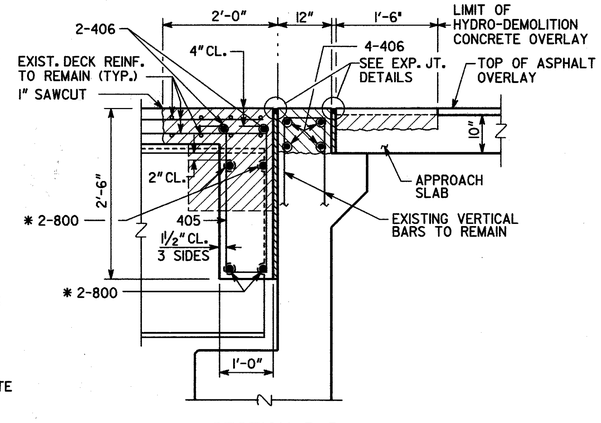

SECTION B-B

(BENTS 1 AND 5)

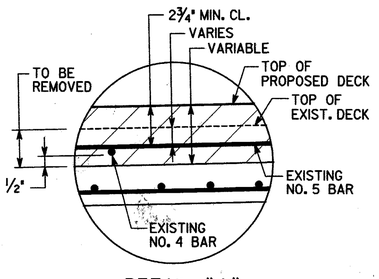

DETAIL "A"

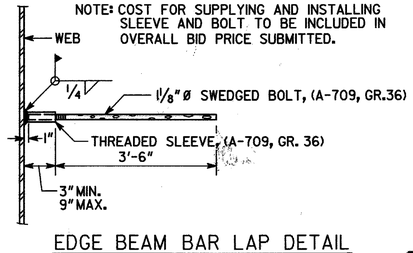

EDGE BEAM BAR LAP DETAIL

BRIDGE NO. 4 LT. & RT.

JBT
J.B. TRIMBLE, INC.
6445 Powers Ferry Rd.
Atlanta GA 30339
(770) 952-1022

GEORGIA
DEPARTMENT OF TRANSPORTATION
OPERATIONS DIVISION-OFFICE OF MAINTENANCE

DISTRICT 6 BRIDGE REPAIR
I-75 OVER C.R. 5621
AND CSXT RAILROAD
DECK SECTION

GORDON COUNTY NHS-M002-00(789)

SCALE: AS SHOWN APRIL 2005

BY	REVISIONS	DATE

BRIDGE SHEET 6 OF 7

DESIGNED PJC CHECKED GLE REVIEWED WMD
DRAWN ITD DESIGN GROUP MAINTENANCE APPROVED BKS

6/15/2005

m:\tra\31-4085 bridge maint, deck rehab\nhs-m002-00(789) bartow-gordon co\dgn\bridge\31-4085(789)bartow(br4)\789b4ds.dgn

789b4ds.dgn 6/15/2005 4:46:33 PM