STATE	PROJECT NUMBER	SHEET NO.	TOTAL SHEETS
GA.	NHS-M002-00(789)	72	106

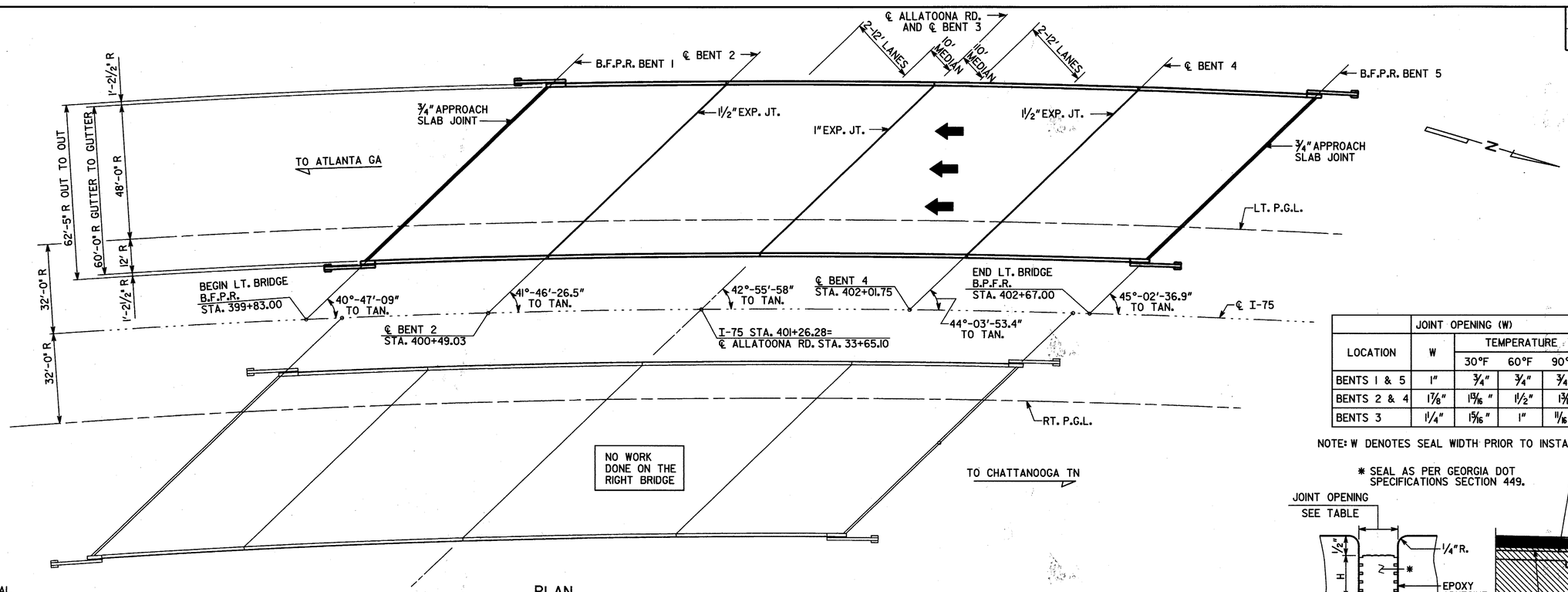

R = RADIAL

PLAN

LOCATION	JOINT OPENING (W)			
	W	TEMPERATURE		
		30°F	60°F	90°F
BENTS 1 & 5	1"	¾"	¾"	¾"
BENTS 2 & 4	1⅞"	1 13/16"	1½"	1 3/16"
BENTS 3	1¼"	1 5/16"	1"	11/16"

NOTE: W DENOTES SEAL WIDTH PRIOR TO INSTALLATION

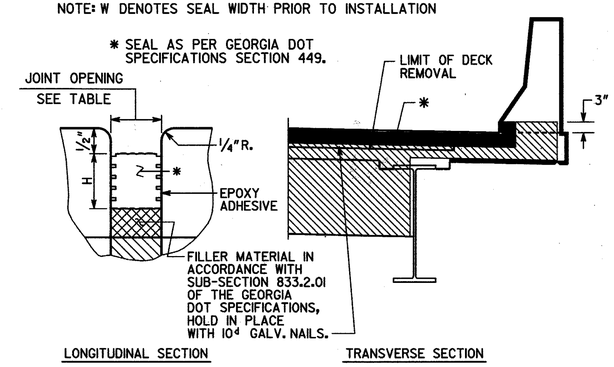

EXPANSION JOINT DETAILS

CURVE DATA

P.I. STA. 408+51.73
Δ = 64°-28'-46" RT.
D = 1°-30'-00"
T = 2409.10'
L = 4298.63'
R = 3819.72'
S.E.= 0.04 FT./FT.

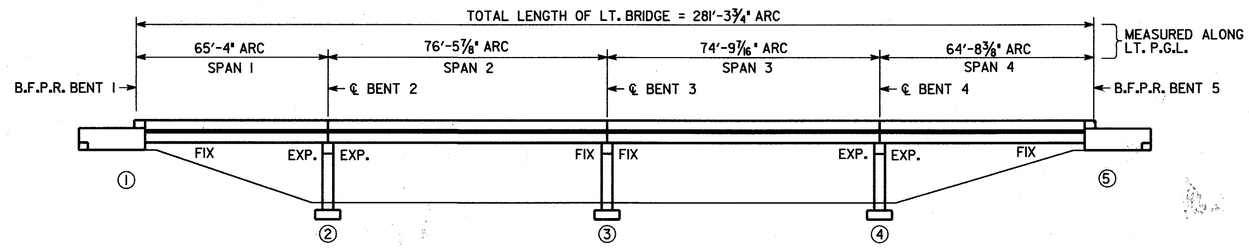

ELEVATION

(LT. BRIDGE)

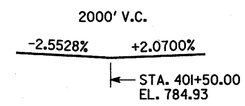

GRADE DATA

(FROM EXISTING BRIDGE PLANS)

EXISTING LT. BRIDGE SERIAL NO.	015-0082-0
EXISTING LT. BRIDGE ID NO.	015-00401D-283.70N
EXISTING RT. BRIDGE SERIAL NO.	N/A
EXISTING RT. BRIDGE ID NO.	N/A
PROJECT PI NO.	M002789

BRIDGE NO. 2 LT.

WORK CONSISTS OF

1. REMOVAL OF THE EXISTING CONCRETE DECK TO ½" BELOW THE BOTTOM OF THE TOP MAT OF REINFORCING STEEL AND REPLACEMENT WITH A NEW CONCRETE OVERLAY. ALL EXISTING REINFORCING STEEL EXPOSED DURING DECK REMOVAL SHALL REMAIN IN PLACE.
2. REPLACEMENT OF EXISTING CONCRETE EDGEBEAMS WITH NEW CONCRETE EDGEBEAMS AT BENTS 2, 3, & 4.
3. INSTALLATION OF NEW EXPANSION JOINTS AT BENTS 2, 3, & 4.

EXISTING UTILITIES

NONE

JBT J.B. TRIMBLE, INC.
6445 Powers Ferry Rd.
Atlanta GA 30339
(770) 952-1022

GEORGIA
DEPARTMENT OF TRANSPORTATION
OPERATIONS DIVISION-OFFICE OF MAINTENANCE

DISTRICT 6 BRIDGE REPAIR
I-75 (SBL) OVER C.R. 397 (ALLATOONA ROAD)
PLAN AND ELEVATION
BARTOW COUNTY NHS-M002-00(789)

SCALE: NO SCALE U.O.N. APRIL 2005

GEORGIA REGISTERED No. 28866 PROFESSIONAL ENGINEER GARRICK LEE EDMONDSON 4-28-05

BY	REVISIONS	DATE

BRIDGE SHEET 1 OF 4

DESIGNED PJC | CHECKED GLE | REVIEWED WMD
DRAWN ITD | DESIGN GROUP MAINTENANCE | APPROVED BKS

m:\tra\31-4085 bridge maint, deck rehab\nhs-m002-00(789) bartow-gordon co\dgn\bridge\31-4085(789)bartow(br2)\789b2pe.dgn

6/15/2005