STATE	PROJECT NUMBER	SHEET NO.	TOTAL SHEETS
GA.	NHS-M002-00(789)	71	1[illegible]

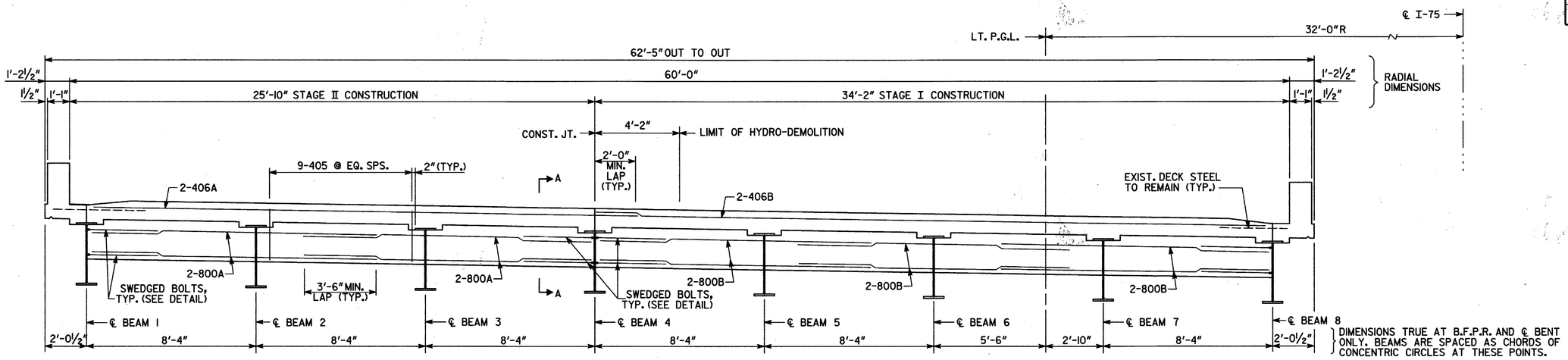

SECTION THRU EDGEBEAM

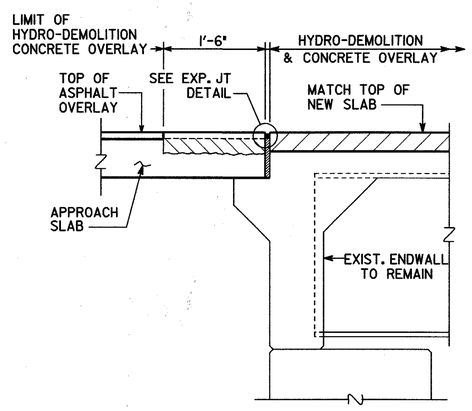

ENDWALL SECTION

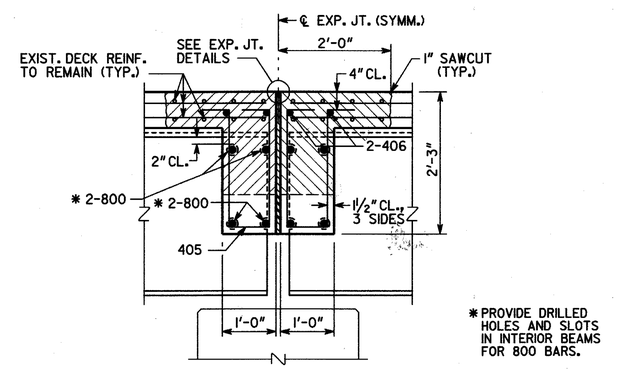

SECTION A-A

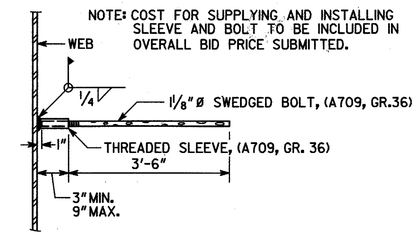

EDGE BEAM BAR LAP DETAIL

NOTES

1. CLEARANCE OF REINFORCEMENT IS 2" UNLESS NOTED OTHERWISE.
2. CARE SHALL BE EXERCISED IN REMOVAL OF EXISTING CONCRETE TO MAKE CUTS VERTICAL AND TO RETAIN EXISTING REINFORCEMENT. EXISTING REINFORCEMENT BARS TO BE SPLICED INTO NEW WORK SHALL EXTEND A MINIMUM OF 1'-10" INTO NEW SECTION. ANY EXISTING REINFORCEMENT STEEL DAMAGED DURING REMOVAL SHALL BE REPLACED BY THE CONTRACTOR AT NO ADDITIONAL COST.
3. NON-CONTACT LAPS MAY BE USED BETWEEN EXISTING AND NEW TRANSVERSE DECK BARS.

REINFORCING SCHEDULE

LOCATION	NO. OF LOC.	MARK	LENGTH FT.	LENGTH IN.	NO. BARS REQ'D.	TYPE	A	G	B FT.	B IN.	C FT.	C IN.	D FT.	D IN.
BENT 2 OR 3	2													
		405	5-	1	126	31	4	4	0-	9	1-	9½	1-	9½
		406A	27-	4	4	1								
		406B	33-	6	4	1								
		800A	14-	3	16	1								
		800B	13-	6	24	1								

BRIDGE NO. 1 LT.

JBT
J.B. TRIMBLE, INC.
6445 Powers Ferry Rd.
Atlanta GA 30339
(770) 952-1022

GEORGIA
DEPARTMENT OF TRANSPORTATION
OPERATIONS DIVISION-OFFICE OF MAINTENANCE

DISTRICT 6 BRIDGE REPAIR
I-75 (SBL) OVER C.R. 427 (JOE STELLA DRIVE)
DECK SECTION
BARTOW COUNTY NHS-M002-00(789)

SCALE: NO SCALE U.N.O. APRIL 2005

DATE	REVISIONS	BY

BRIDGE SHEET 4 OF 4

DESIGNED PJC | CHECKED GLE | REVIEWED WMD
DRAWN ITD | DESIGN GROUP MAINTENANCE | APPROVED BKS

m:\tra\31-4085 bridge maint, deck rehab\nhs-m002-00(789) bartow-gordon co\dgn\bridge\31-4085(789)bartow(br1)\789blds.dgn

6/15/2005

M 2:30:2 6/15/2005 dgn 789blds