STATE	PROJECT NUMBER	SHEET NO.	TOTAL SHEETS
GA.	NHS-M002-00(789)	68	106

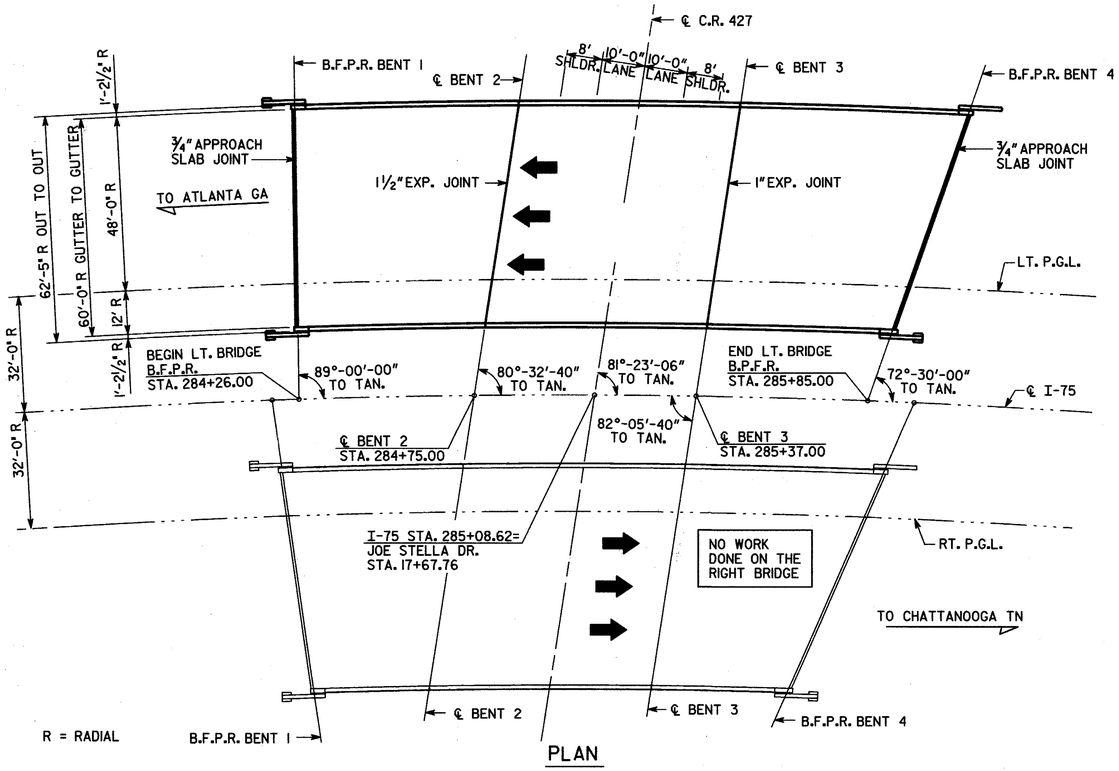

PLAN

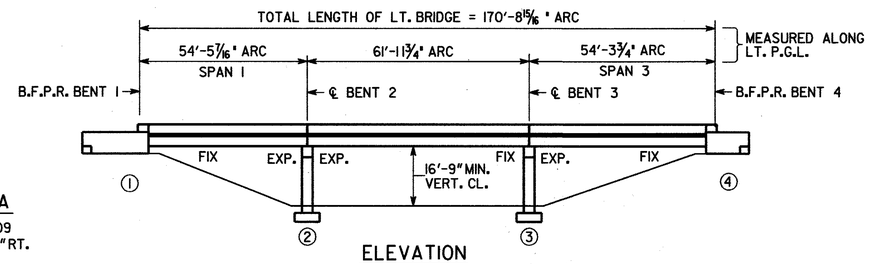

ELEVATION
(LT. BRIDGE)

CURVE DATA

P.I. STA. 282+88.09
Δ = 83°-53'-00" RT.
D = 2°-30'-00"
T = 2059.35'
L = 3355.33'
S.E.= 0.07 FT./FT.

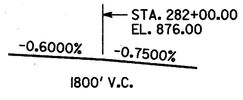

GRADE DATA

(FROM EXISTING BRIDGE PLANS)

WORK CONSISTS OF

1. REMOVAL OF THE EXISTING CONCRETE DECK TO ½" BELOW THE BOTTOM OF THE TOP MAT OF REINFORCING STEEL AND REPLACEMENT WITH A NEW CONCRETE OVERLAY. ALL EXISTING REINFORCING STEEL EXPOSED DURING DECK REMOVAL SHALL REMAIN IN PLACE.
2. REPLACING EXISTING CONCRETE EDGEBEAMS WITH NEW CONCRETE EDGEBEAMS AT BENTS 2 & 3.
3. INSTALLATION OF NEW EXPANSION JOINTS AT BENTS 1, 2, 3, & 4.

EXISTING UTILITIES

NONE

JOINT OPENING (W)				
LOCATION	W	TEMPERATURE		
		30°F	60°F	90°F
BENTS 1 & 4	1"	¾"	¾"	¾"
BENTS 2	1⅞"	1¾"	1½"	1¼"
BENTS 3	1¼"	1⅛"	1"	⅞"

NOTE: W DENOTES SEAL WIDTH PRIOR TO INSTALLATION

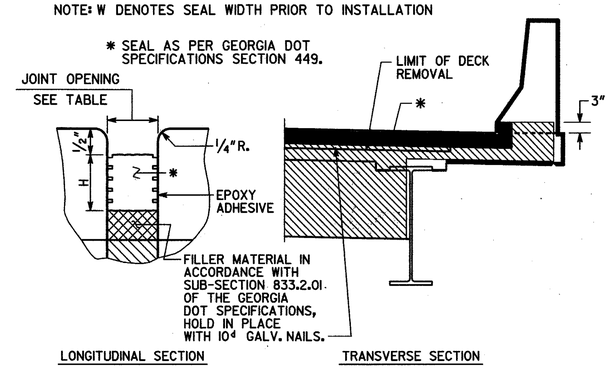

EXPANSION JOINT DETAILS

EXISTING LT. BRIDGE SERIAL NO.	015-0080-0
EXISTING LT. BRIDGE ID NO.	015-00401D-281.52N
EXISTING RT. BRIDGE SERIAL NO.	N/A
EXISTING RT. BRIDGE ID NO.	N/A
PROJECT PI NO.	M002789

BRIDGE NO. 1 LT.

JBT J.B. TRIMBLE, INC.
6445 Powers Ferry Rd.
Atlanta GA 30339
(770) 952-1022

GEORGIA
DEPARTMENT OF TRANSPORTATION
OPERATIONS DIVISION-OFFICE OF MAINTENANCE

DISTRICT 6 BRIDGE REPAIR
I-75 (SBL) OVER C.R. 427 (JOE STELLA DRIVE)
PLAN AND ELEVATION

BARTOW COUNTY NHS-M002-00(789)

SCALE: NO SCALE U.N.O. APRIL 2005

GEORGIA REGISTERED No. 28866 PROFESSIONAL GARREN LEE EDWARDS 6-28-05

BY	REVISIONS	DATE

BRIDGE SHEET 1 OF 4

DESIGNED PJC	CHECKED GLE	REVIEWED WMD
DRAWN ITD	DESIGN GROUP MAINTENANCE	APPROVED BKS

6/15/2005

m:\tra\31-4085 bridge maint. deck rehab\nhs-m002-00(789) bartow-gordon co\dgn\bridge\31-4085(789)bartow(br1)\789blpe.dgn