STATE	PROJECT NUMBER	SHEET NO.	TOTAL SHEETS
GA.	CSSTP-M002-00(188)	28	37

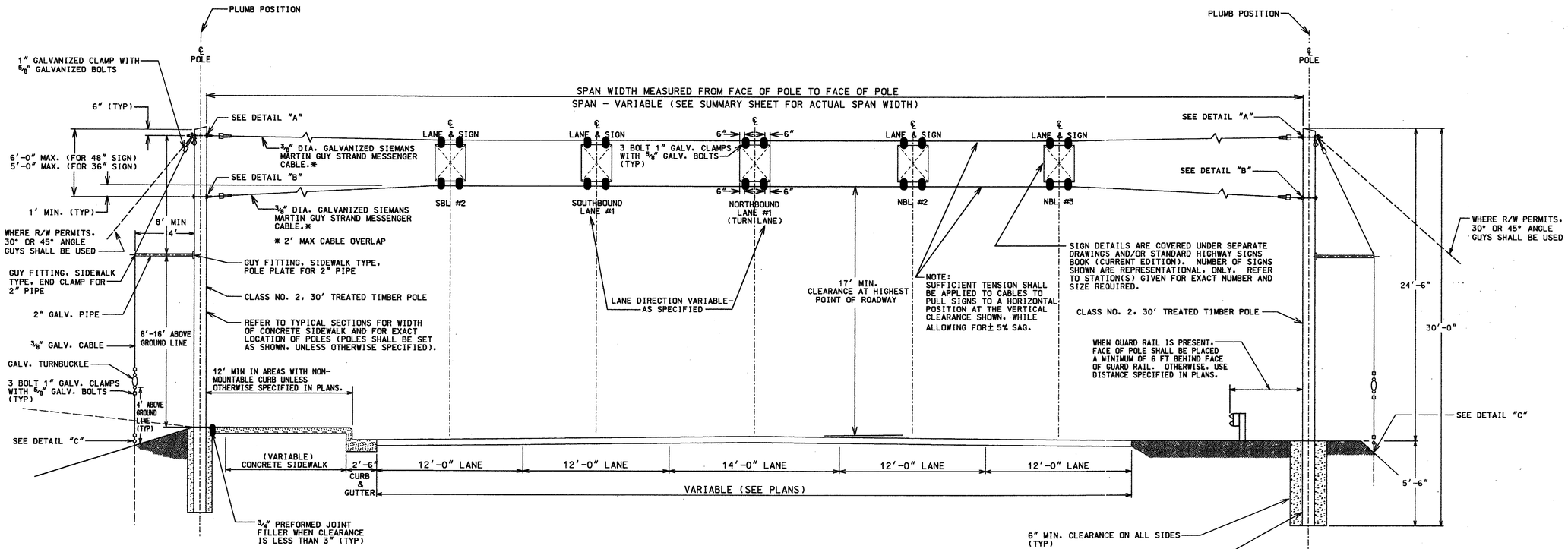

ROADWAY SECTION WITH NON-MOUNTABLE CURB

ROADWAY SECTION WITHOUT CURB

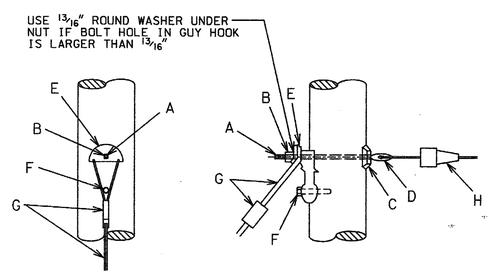

BACK VIEW

SIDE VIEW

DETAIL "A"
(SEE PARTS LIST)

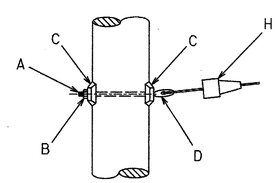

DETAIL "B"
(SEE PARTS LIST)

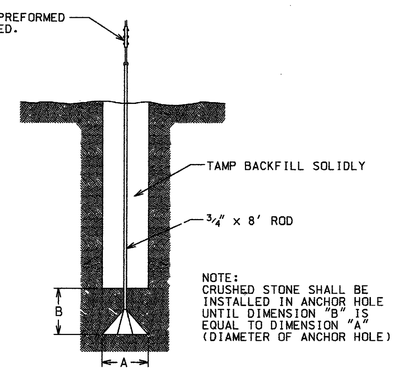

DETAIL "C"
(INSTALLATION SHOWN FOR 8" CONE TYPE GUY ANCHOR (6M). COMPARABLE SCREW TYPE (6M) MAY BE USED)

A	3/4" SPACE BOLTS
B	3/4" M F LOCKNUTS
C	4" x 4" CURVED WASHERS, 13/16" HOLE
D	3/4" THIMBLE EYE NUT
E	HEAVY DUTY GUY HOOK
F	1/2" x 4" LAG SCREW
G	3/8" GLAV. CABLE AND CLAMPS
H	STRANDVISE

NOTE: PREFORMED CABLE GRIPS MAY BE USED IN LIEU OF CABLE CLAMPS.

PARTS LIST

DATE	REVISIONS

GEORGIA DEPARTMENT OF TRANSPORTATION
OFFICE OF TRAFFIC SAFETY & DESIGN

DETAILS OF
TIMBER POLE ERECTION
FOR OVERHEAD SIGNS

NO SCALE JANUARY 2000

PCBDTB
\\GDOT\timber pole erection.dgn Jul 03, 2003 16:16:12