STATE	PROJECT NUMBER	SHEET NO.	TOTAL SHEETS
GA.	CSNHS-M002-00(785)	48	71

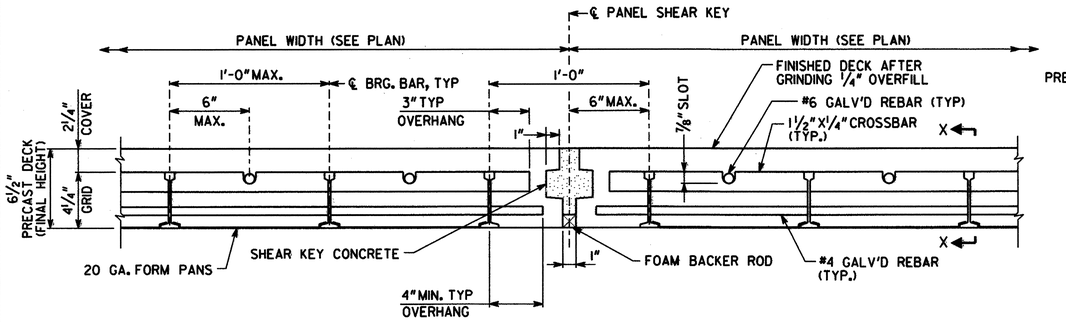

SECTION A-A

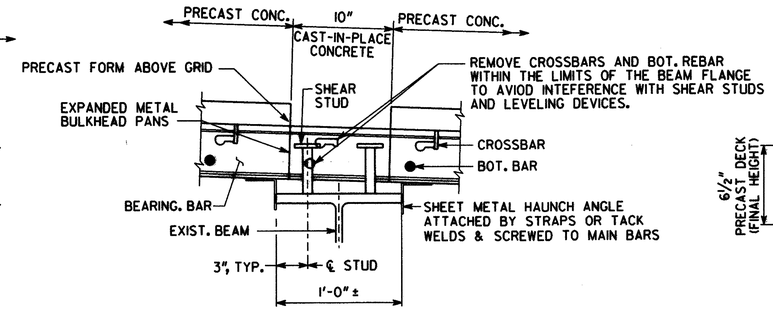

SECTION B-B

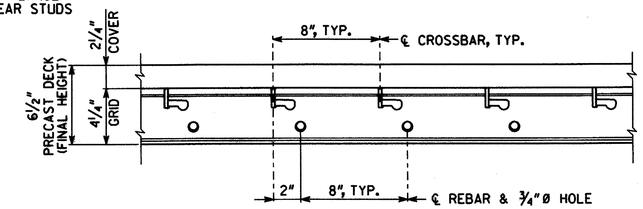

SECTION X-X

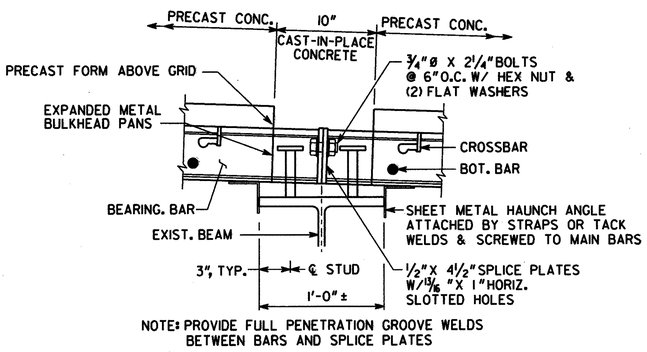

SECTION C-C

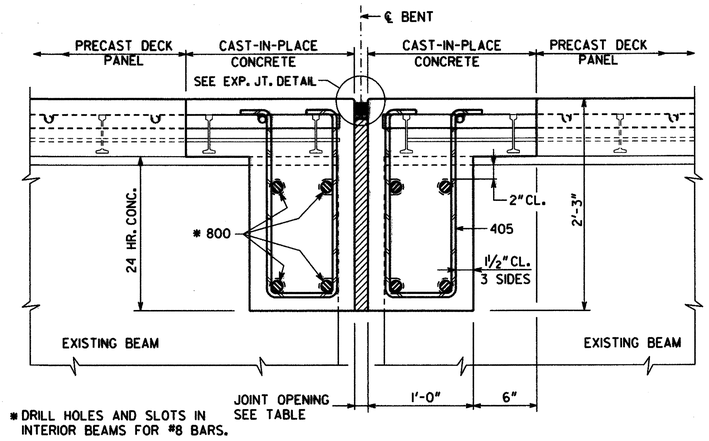

SECTION D-D

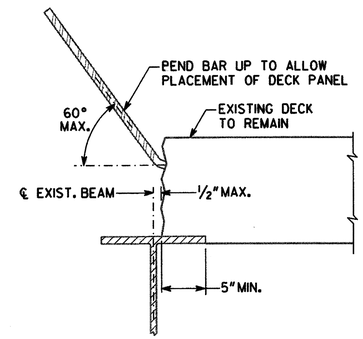

ONE SIDE REMOVED

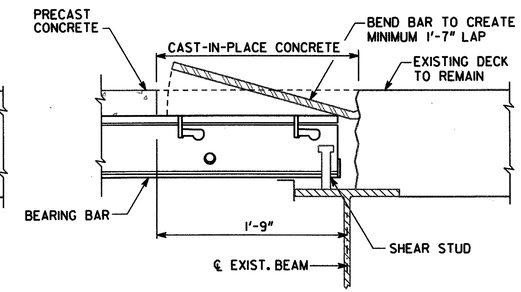

DECK PANEL PLACED

SECTION E-E

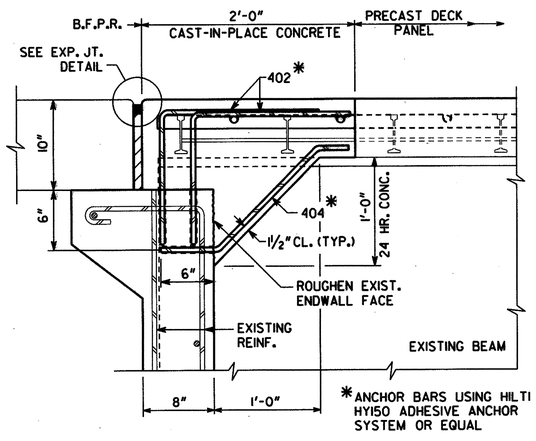

SECTION F-F

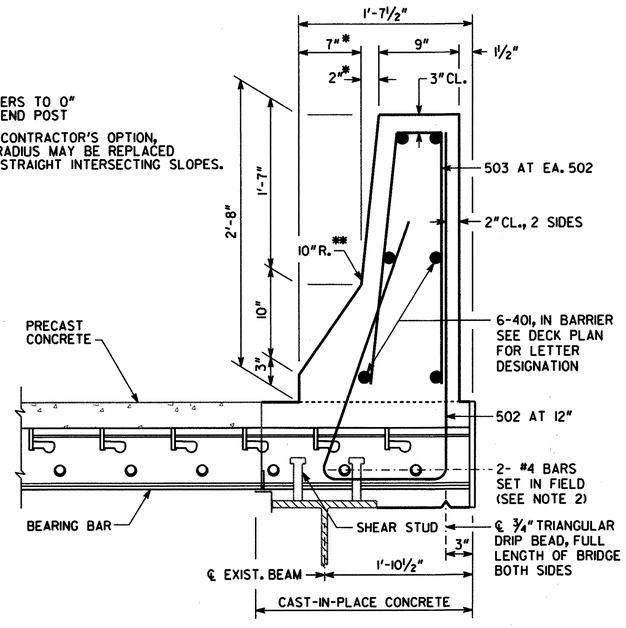

SECTION G-G

NOTES:

1. INCLUDE COST FOR ADHESIVE ANCHORS IN THE PRICE BID FOR REINFORCING STEEL.
2. INCLUDE COST FOR ADDITIONAL BARS IN THE PRICE BID FOR STEEL GRID DETAIL.

BRIDGE NO. 2 LT. & RT.

JBT J.B. Trimble, Inc.
2550 Heritage CT, SE, Suite 250
Atlanta GA 30339-3062
(770) 952-1022

GEORGIA
DEPARTMENT OF TRANSPORTATION
OPERATIONS DIVISION-OFFICE OF MAINTENANCE

DISTRICT 3 BRIDGE REPAIR
I-75 OVER FAS 1577 (HAMPTON ROAD)
PRECAST DECK PLAN DETAIL

HENRY COUNTY CSNHS-M002-00(785)

SCALE: NO SCALE U.N.O. MAY 2006

DATE	REVISIONS	BY

BRIDGE SHEET 7 OF 9

DESIGNED MDT	CHECKED GLE	REVIEWED BFR	
DRAWN ITD	DESIGN GROUP MAINTENANCE	APPROVED BFR	

m:\tra\31-4085 bridge maint. deck rehab\nhs-m002-00(785) butts-henry co\dgn\bridge\bridge 2\2785b2md.dgn

7/11/2006