STATE	PROJECT NUMBER	SHEET NO.	TOTAL SHEETS
GA.	CSNHS-M002-00(785)	40	71

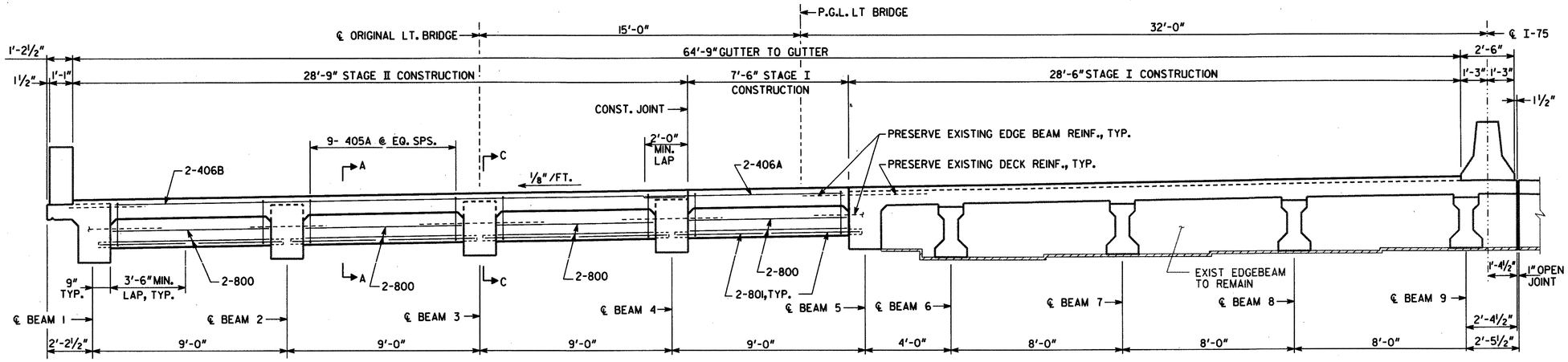

PARTIAL SECTION THRU EDGEBEAM

(LEFT BRIDGE SHOWN, RIGHT BRIDGE SIMILAR)

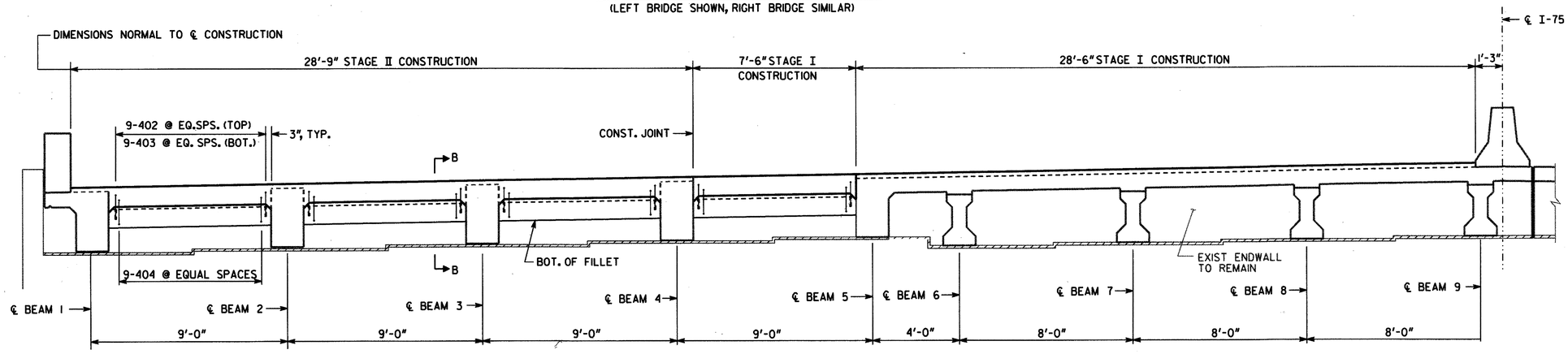

PARTIAL SECTION THRU ENDWALL

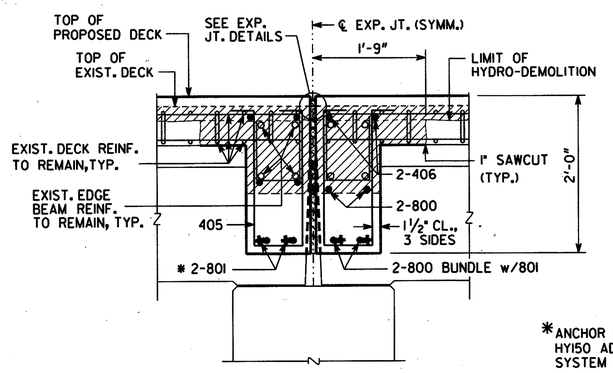

SECTION A-A

*ANCHOR BARS USING HILTI HY150 ADHESIVE ANCHOR SYSTEM OR EQUAL

DENOTES CONCRETE TO BE REMOVED

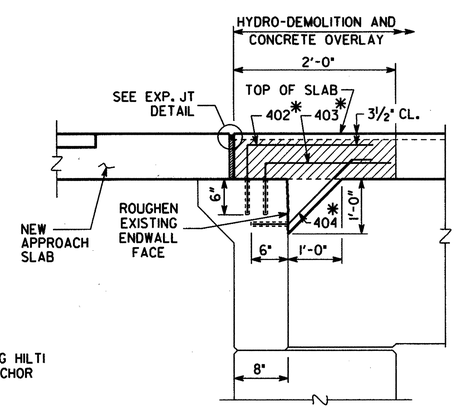

SLAB REINFORCEMENT NOT SHOWN.

SECTION B-B

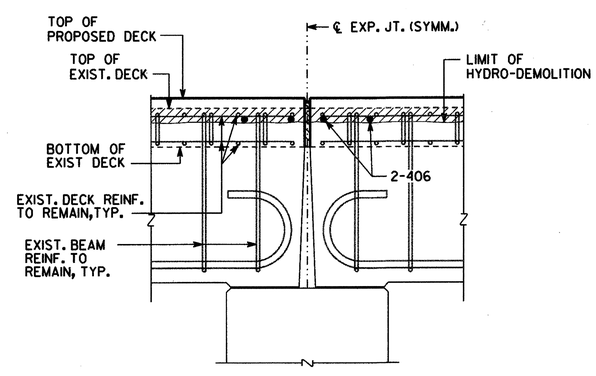

SECTION C-C

NOTES

1. CAST EDGEBEAM AND ENDWALL CONCRETE WITH OVERLAY.

BRIDGE NO. 1 LT. & RT.

J.B. Trimble, Inc.
2550 Heritage CT, SE, Suite 250
Atlanta GA 30339-3062
(770) 952-1022

GEORGIA
DEPARTMENT OF TRANSPORTATION
OPERATIONS DIVISION-OFFICE OF MAINTENANCE

DISTRICT 3 BRIDGE REPAIR
I-75 OVER CABIN CREEK
DECK SECTION

BUTTS COUNTY — CSNHS-M002-00(785)

SCALE: NO SCALE U.N.O. — MAY 2006

REVISIONS	BY	DATE
REVISED SECTIONS	GLE	06-12-06

BRIDGE SHEET 5 OF 6

DESIGNED MDT — CHECKED GLE — REVIEWED BFR
DRAWN ITD — DESIGN GROUP MAINTENANCE — APPROVED BFR

m:\tra\31-4085 bridge maint, deck rehab\nhs-m002-00(785) butts-henry co\dgn\bridge\bridge 1\2785bldsl.dgn

7/11/2006