STATE	PROJECT NUMBER	SHEET NO.	TOTAL SHEETS
GA.	CSNHS-M002-00(784)	66	71

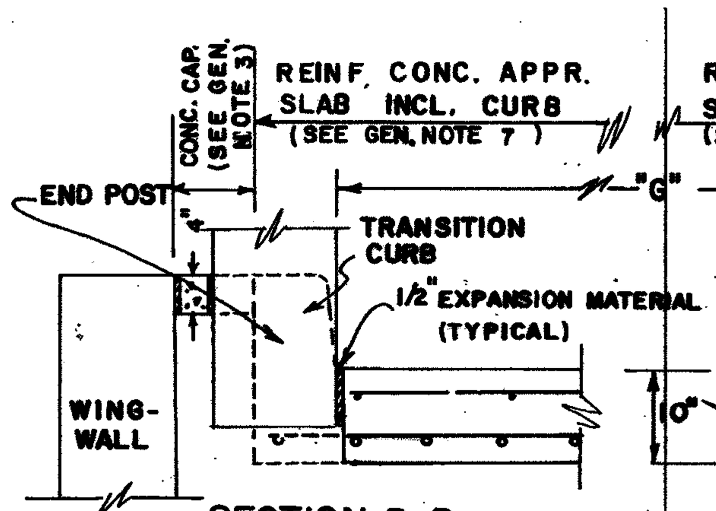

SECTION B-B

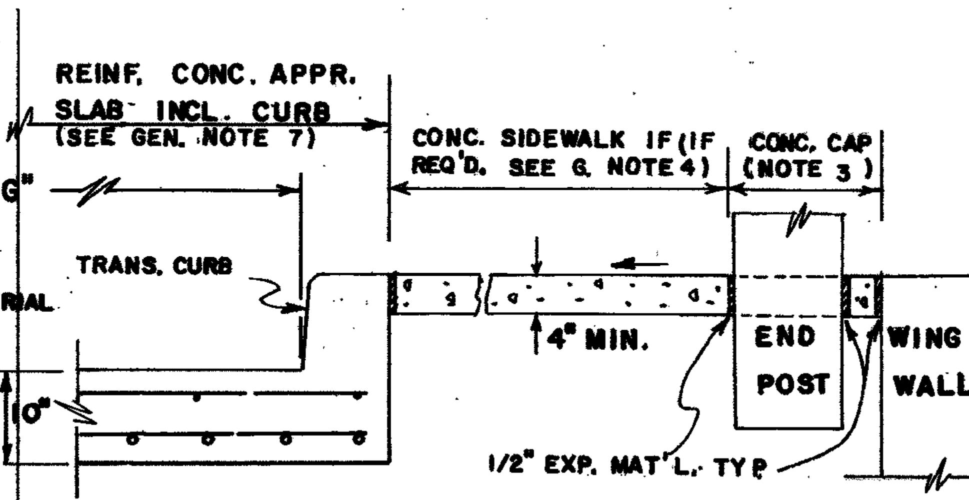

SECTION C-C

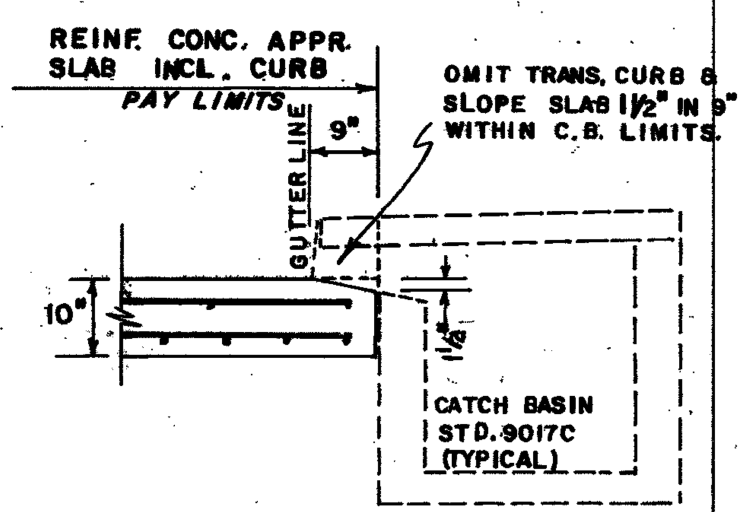

SECTION D-D (WITH CATCH BASIN)

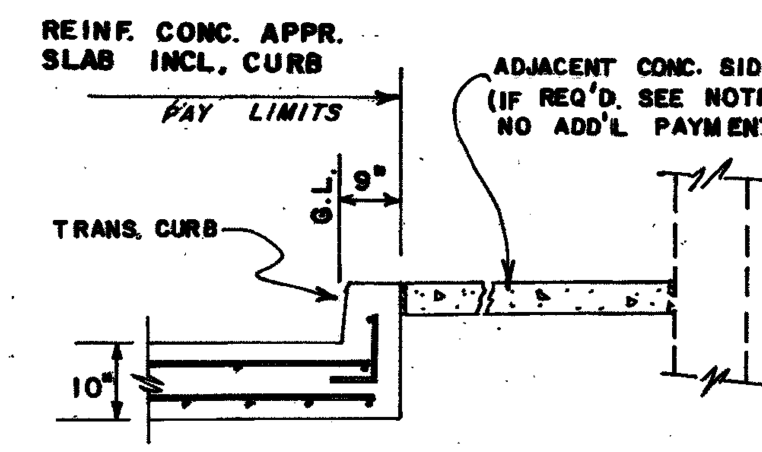

SEC. D-D (WITHOUT CATCH BASIN)

(CURB HEIGHT AND FACE TO BE TRANSITIONED FROM ROADWAY CURB TO BRIDGE CURB)

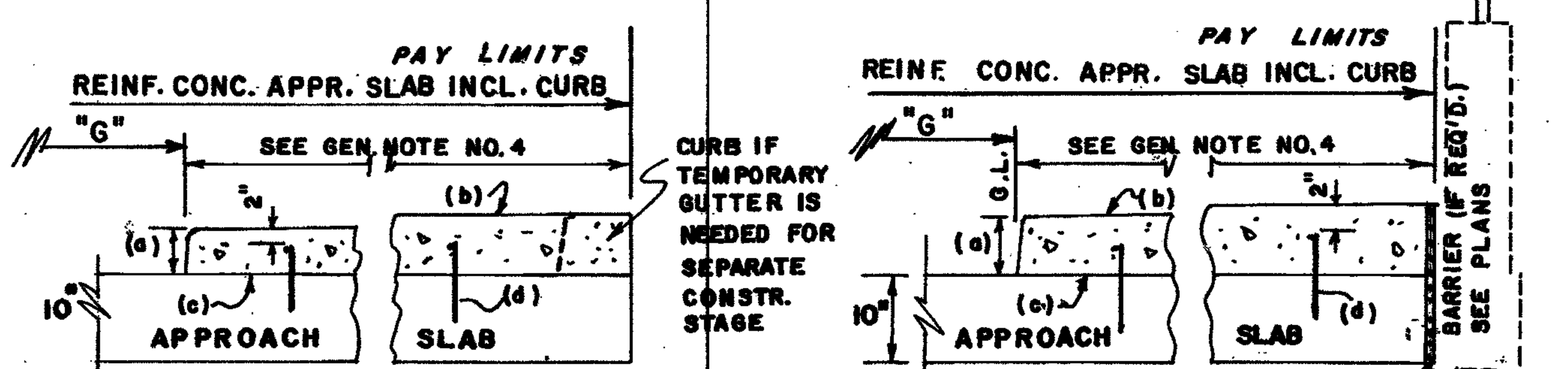

NOTE: SIDEWALK ON APPROACH SLAB DETAILS ARE APPLICABLE ONLY WHERE SPECIFIED.

(a) - HEIGHT & BATTER TRANSITIONED FROM ROAD CURB FACE TO BRIDGE CURB FACE.

(b) - SURFACE FINISH SAME AS SIDEWALK, GRADE & SLOPE COMPATIBLE WITH ROADWAY/ BRIDGE SIDEWALK.

(c) - CONSTRUCTION JOINT

(d) - DOUBLE ROW OF 12" LONG #4 DOWELS AT 1'-7" O.C. WITH #4 LONGIT. BAR AT TOP.

TYPICAL DETAILS OF SIDEWALKS ON APPROACH SLABS

NOTE: TYPICAL USE OF ABOVE DETAILS IS WHERE STAGE CONSTRUCTION NECESSITATES USE OF SIDEWALK AREA FOR TRAVEL LANE PRIOR TO CONSTRUCTION OF SIDEWALK.

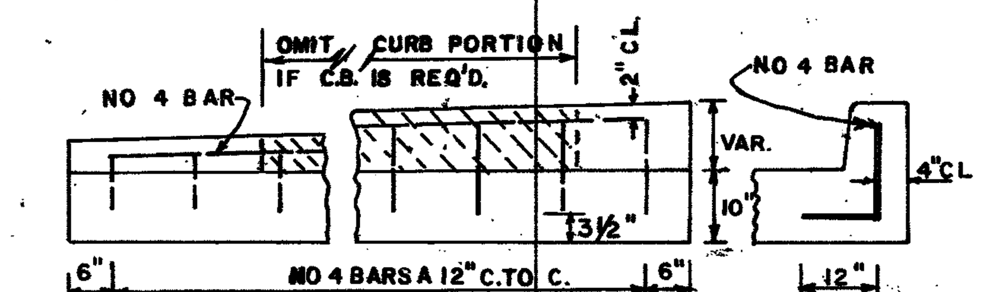

DETAIL SHOWING REINFORCEMENT FOR TRANSITION CURB

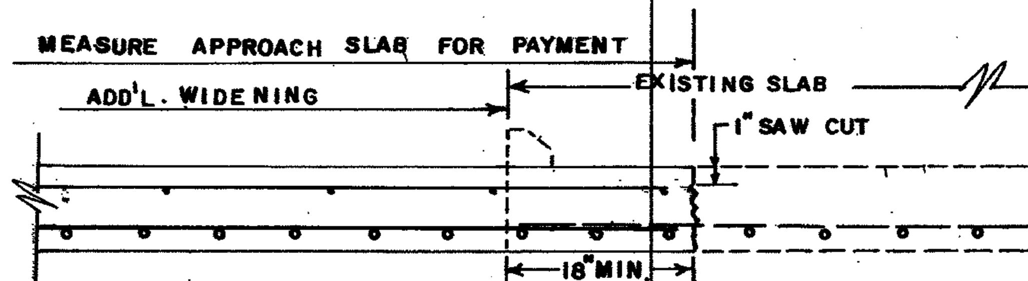

NEW TO EXISTING APPROACH SLAB CONNECTION

REMOVE CONCRETE FROM 18" STRIP WITH CARE TO MAKE CUT AS VERTICAL AS POSSIBLE. EXPOSED BARS TO BE CUT AND BENT TO FIT WITH ALL SCALE AND RUST REMOVED. EPOXY IS REQUIRED BETWEEN NEW AND EXISTING CONCRETE. EXISTING REINFORCING SHALL EXTEND 15" MIN. INTO NEW SECTION. PAYMENT FOR NEW SLAB INCLUDES ALL WORK HEREIN DESCRIBED.

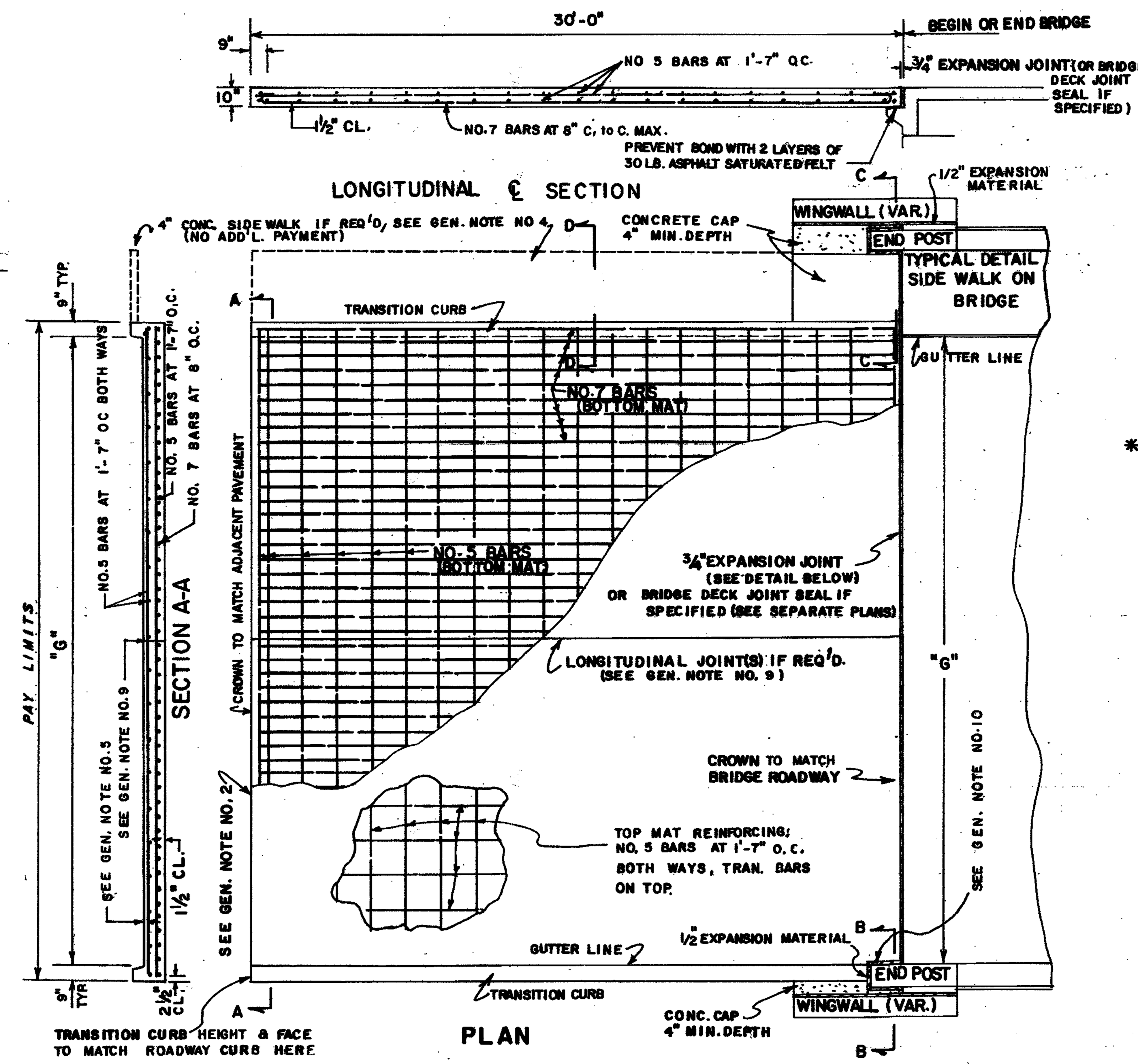

"G"	SQ. YDS. OF APPR. SLAB $= \frac{(G+1.5')\times 30}{9}$	BOTTOM MAT REINF. 31'-2" LONG #7 LONGIT. BARS -NUMBER- (=1.5 G + 2.75)	BOTTOM MAT REINF. 21 TRANSV. #5 BARS -LENGTH- (= G + 13")	TOP MAT REINF. 29'-6" LONG #5 LONGIT. BARS -NUMBER- $=\frac{12}{19}$(G+13")+1	TOP MAT REINF. 21 TRANSV. #5 BARS -LENGTH- (= G + 13")
28'-0"	98.33	45	29'-1"	20	29'-1"
32'-0"	111.67	51	33'-1"	22	33'-1"
36'-0"	125.00	57	37'-1"	25	37'-1"
40'-0"	138.33	63	41'-1"	27	41'-1"
42'-0"	145.00	66	43'-1"	29	43'-1"
48'-0"	162.50	75	49'-1"	32	49'-1"
52'-0"	178.33	81	53'-1"	35	53'-1"
58'-0"	198.33	90	59'-1"	39	59'-1"
60'-0"	205.00	93	61'-1"	40	62'-1"
62'-0"	211.67	96	63'-1"	41	63'-1"
64'-0"	218.33	99	65'-1"	43	66'-1"
66'-0"	225.00	102	67'-1"	44	67'-1"

QUANTITIES & REINFORCEMENT FOR TYPICAL SLAB SIZES**

** DATA ABOVE ARE BASED UPON COMMON WIDTHS. WHERE OTHER "G" DIMENSIONS ARE ENCOUNTERED, THE FORMULAE AT COLUMN TOPS MAY BE USED TO COMPUTE THE NEEDED QUANTITIES. WHERE IT IS NECESSARY TO MODIFY APPROACH SLAB TO EXTEND UNDER SIDEWALK (DETAILS AT LEFT CENTER), THE FORMULAE SHALL BE ADJUSTED TO REFLECT SIDEWALK WIDTHS RATHER THAN TRANSITION CURB WIDTHS.

GENERAL NOTES:

1. SPECIFICATIONS: GEORGIA STANDARD, CURRENT EDITION, AND SUPPLEMENTS THERETO.
2. WHERE PORTLAND CEMENT CONCRETE PAVEMENT IS TO BE USED FOR ROADWAY PAVING, DOWEL BARS WILL BE INSTALLED IN THE APPROACH SLAB PER STANDARD 3046 H. PAYMENT FOR THE APPROACH SLAB WILL INCLUDE THESE DOWELS WHEN THE APPROACH SLAB IS CONSTRUCTED BEFORE THE PCC PAVEMENT CONSTRUCTION.
3. ALL AREAS BETWEEN WINGWALL AND APPROACH SLAB SHALL BE CAPPED WITH 4" MIN. CONCRETE AND/OR CONC. SIDEWALK WITH HOLES BLOCKED OUT FOR GUARDRAIL POST INSTALLATIONS (PER STD. 4012B). PAYMENT FOR APPROACH SLAB INCLUDES THE ½" EXPANSION MATERIAL & CONCRETE CAP OR CONCRETE SIDEWALK WITH THE BLOCKED OUT HOLES.
4. WHERE SIDEWALK IS CARRIED ACROSS THE BRIDGE, PAYMENT FOR THE APPROACH SLAB SHALL INCLUDE CONCRETE SIDEWALK ADJACENT TO OR ON THE APPROACH SLAB. THIS SIDEWALK MAY BE CONSTRUCTED FROM CL. A CONCRETE OR PER SECTION 441. GRADE OF SIDEWALK SHALL BE ADJUSTED TO FIT ADJACENT ELEMENTS AND WIDTH SHALL BE EQUAL TO ADJOINING SIDEWALK UNLESS OTHERWISE APPROVED BY THE ENGINEER.
5. COVER OVER TOP MAT OF REINFORCING WILL MATCH THAT OF THE BRIDGE DECK.
6. WHERE APPROACH SLAB IS INTERCEPTED BY END POST OR WHERE TRANSITION CURB IS INTERCEPTED BY CATCH BASIN, EXTERIOR BARS WILL BE SHORTENED AS NEEDED TO GIVE A 3" CLEARANCE TO STRUCTURE.
7. PAY AREA FOR APPROACH SLAB IS COMPUTED AS THE PRODUCT: (GROSS WIDTH OF REINFORCED SLAB) x (SLAB LENGTH) WITH NO DEDUCTIONS MADE FOR AREAS OCCUPIED BY THE END POST & EXPANSION JOINT OR BY DRAINAGE STRUCTURES, AND NO ADDITIONS MADE FOR SIDEWALKS OR OTHER ITEMS WHEN REQUIRED WITH THE APPROACH SLAB.
8. SEE SEPARATE PLAN DETAILS FOR SUBBASE OR OTHER MATERIALS UNDER THE APPROACH SLAB. IF "CS" CONC. OR P.C. CONC. SUBBASE IS USED, CLEAR POLYETHYLENE SHEETING 8 MILS MIN. THICKNESS, WITH A 6" OVERLAP, UNIFORMLY LAYED SHALL BE REQUIRED UNDER THE APPROACH SLAB TO PREVENT BONDING. POLYETHYLENE SHEETING SHALL BE NEW, UNUSED AND FREE OF HOLES, RIPS AND TEARS.
9. ALL APPROACH SLABS EXCEEDING 42' IN WIDTH WILL CONTAIN A LONGITUDINAL CONSTRUCTION JOINT, SLABS EXCEEDING 60' AND 90' IN WIDTH SHALL CONTAIN 2 AND 3 LONGITUDINAL CONSTRUCTION JOINTS RESPETIVELY. SECTIONS BETWEEN JOINTS OR BETWEEN A JOINT AND SLAB EDGE SHALL NOT BE LESS THAN 12' OR MORE THAN 30' WIDE. REINFORCEMENT STEEL REMAINS UNCHANGED AND SHALL EXTEND THRU JOINTS. JOINTS SHALL BE LOCATED AT LANE LINES TO PROVIDE OFFSET FROM WHEEL PATHS.
10. IF BRIDGE DECK JOINT SEAL IS USED BETWEEN APPROACH SLAB AND BRIDGE, THE END OF SLAB ADJACENT TO END POST WILL BE SEALED WITH LOW MODULUS SILICONE SEALANT.

NOTE:
CATCH BASIN (STD. 9017C TYP.) ADJACENT TO THE APPROACH SLAB IS NOT SHOWN, BUT MAY BE SPECIFIED ON ONE OR BOTH SIDES AS NEEDED. APPROACH SLAB QUANTITIES OR PAY ITEM WILL NOT BE EFFECTED BY CATCH BASIN REQUIREMENTS. APPROACH SLABS PER THIS STANDARD SHALL INCLUDE CURB IN ANY CASE.

SKEWED SLAB: LONGITUDINAL BARS-TRANSVERSE BARS - NOMINAL LENGTH AND NUMBER REQUIRED SAME AS FOR UNSKEWED SLAB.
TRANSVERSE BARS - NUMBER REQUIRED SAME AS FOR UNSKEWED SLAB. NOMINAL LENGTH OF SKEW= UNSKEWED NOMINAL LENGTH DIVIDED BY SIN Ø ROUNDED TO NEAREST INCH.

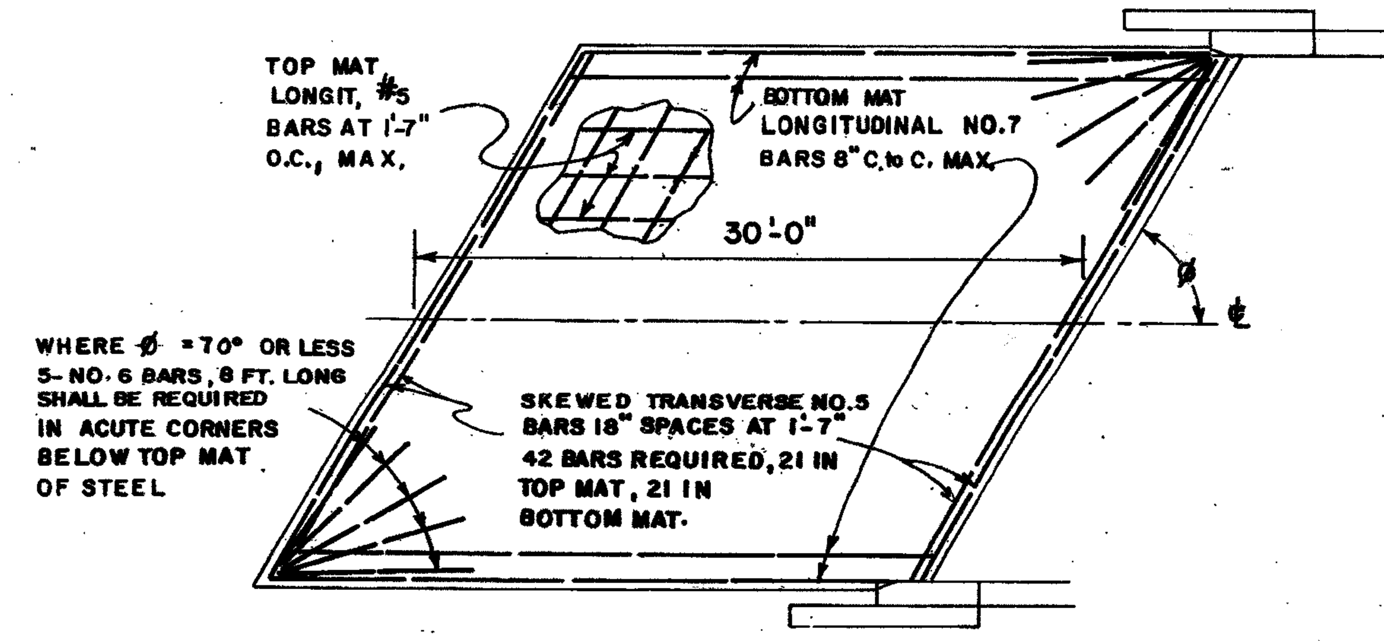

SKEW MODIFICATION SKETCH

NO SCALE

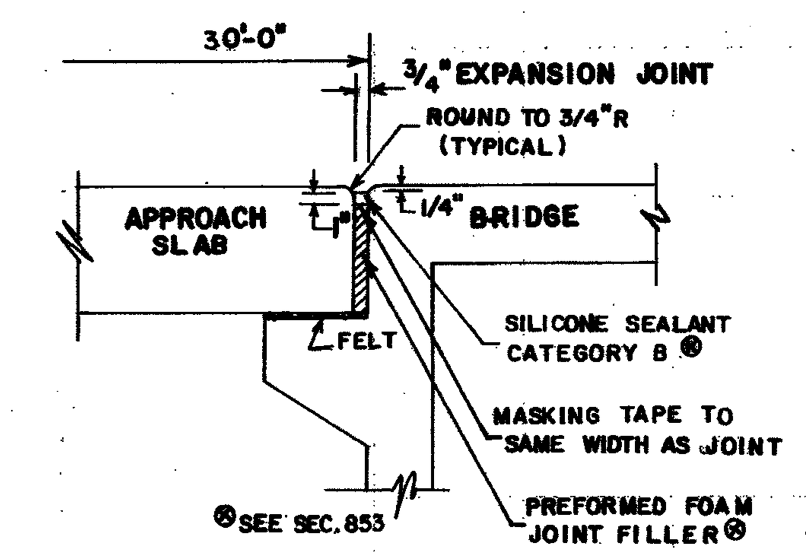

¾" EXPANSION JOINT DETAIL

THE 3/4" EXPANSION JOINT SHOWN ABOVE IS REQUIRED BETWEEN APPROACH SLAB & BRIDGE AT ALL LOCATIONS EXCEPT WHERE BRIDGE DECK JOINT SEAL (SEPARATE PLAN DETAILS) OR OTHER JOINT TYPE IS SPECIFIED.

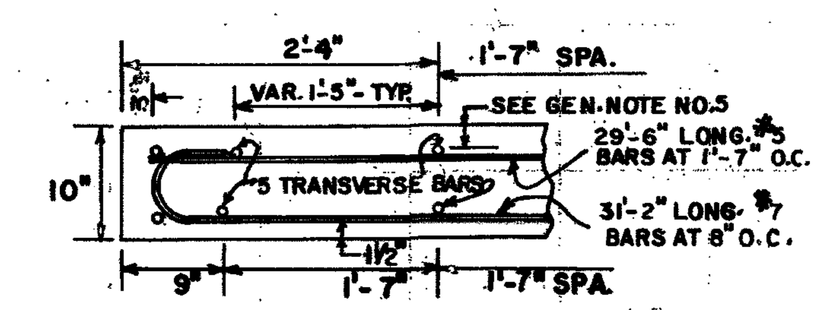

TYPICAL LONGITUDINAL END VIEW

NOTE: THIS STANDARD REPLACES STANDARD 9017 F.

DEPARTMENT OF TRANSPORTATION
STATE OF GEORGIA

STANDARD
REINFORCED CONCRETE APPROACH SLAB
30 FT. LENGTH

TYPICAL USE - CURB OR CURB & GUTTER ADJACENT TO ROADWAY AND/OR SIDEWALK ACROSS BRIDGE

SCALE AS SHOWN — JUNE, 1985

DES. RMU — DRW. RMU — TRA. GME — CHK. RKC

(SUBMITTED) Floyd E. Hardy — STATE ROAD & AIRPORT DESIGN ENGR

(APPROVED) Hal Rives — STATE HIGHWAY ENGINEER

NUMBER 9017K

FORM EF00003