STATE	PROJECT NUMBER	SHEET NO.	TOTAL SHEETS
GA.	CSNHS-M002-00(784)	42	71

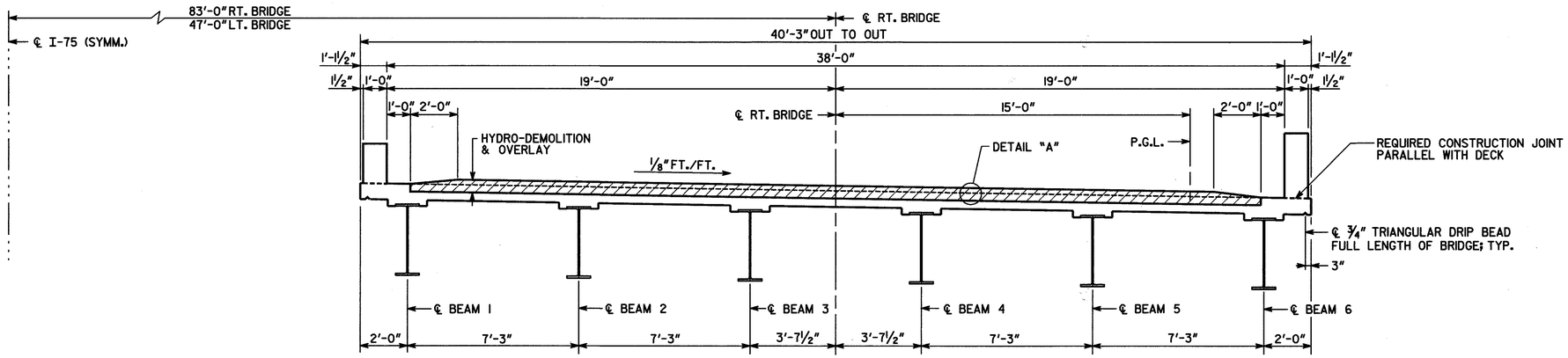

SECTION THRU SLAB

LOOKING AHEAD RIGHT BRIDGE SHOWN

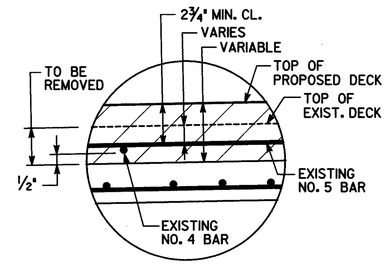

DETAIL "A"

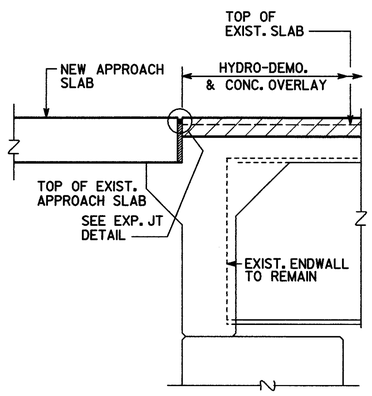

SLAB REINFORCEMENT NOT SHOWN.

ENDWALL SECTION

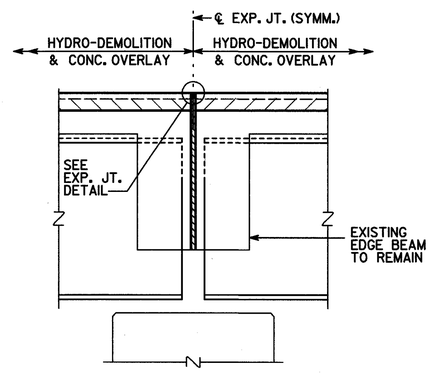

SLAB REINFORCEMENT NOT SHOWN.

SECTION THRU EDGE BEAM

JOINT OPENING (W)				
LOCATION	W	TEMPERATURE		
		30°F	60°F	90°F
BTS. 1 & 4 APPR. (LT & RT)	1"	¾"	¾"	¾"
BTS. 2 LT & RT	1¼"	1⅛"	1"	⅞"
BTS. 3 LT & RT	1¼"	1¼"	1"	¾"

NOTE: W DENOTES SEAL WIDTH PRIOR TO INSTALLATION

* SEAL AS PER GEORGIA DOT SPECIFICATIONS SECTION 449.

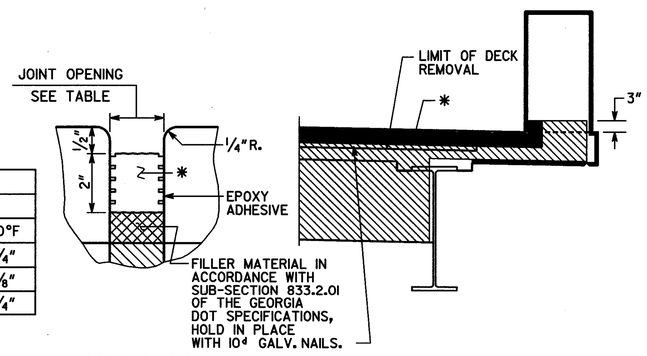

EXPANSION JOINT DETAILS

BRIDGE NO. 3 LT. & RT.

J.B. TRIMBLE, INC.
6445 Powers Ferry Rd.
Atlanta GA 30339
(770) 952-1022

GEORGIA
DEPARTMENT OF TRANSPORTATION
OPERATIONS DIVISION-OFFICE OF MAINTENANCE

DISTRICT 3 BRIDGE REPAIR
I-75 OVER FAS 770 (WESLEYAN DRIVE)
DECK SECTION

BIBB COUNTY CSNHS-M002-00(784)

SCALE: AS SHOWN DECEMBER 2005

REVISIONS	BY	DATE

BRIDGE SHEET 3 OF 3

DESIGNED PJC CHECKED GLE REVIEWED BFR
DRAWN ITD DESIGN GROUP MAINTENANCE APPROVED BFR

4/29/2006

m:\tra\3l-4085 bridge maint, deck rehab\nhs-m002-00(784) bibb co\dgn\bridge\3l-4085(784)bibb(br3)\784b5ds.dgn