| STATE | PROJECT NUMBER | SHEET NO. | TOTAL SHEETS |
|---|---|---|---|
| GA. | CSNHS-M002-00(784) | 34 | 71 |

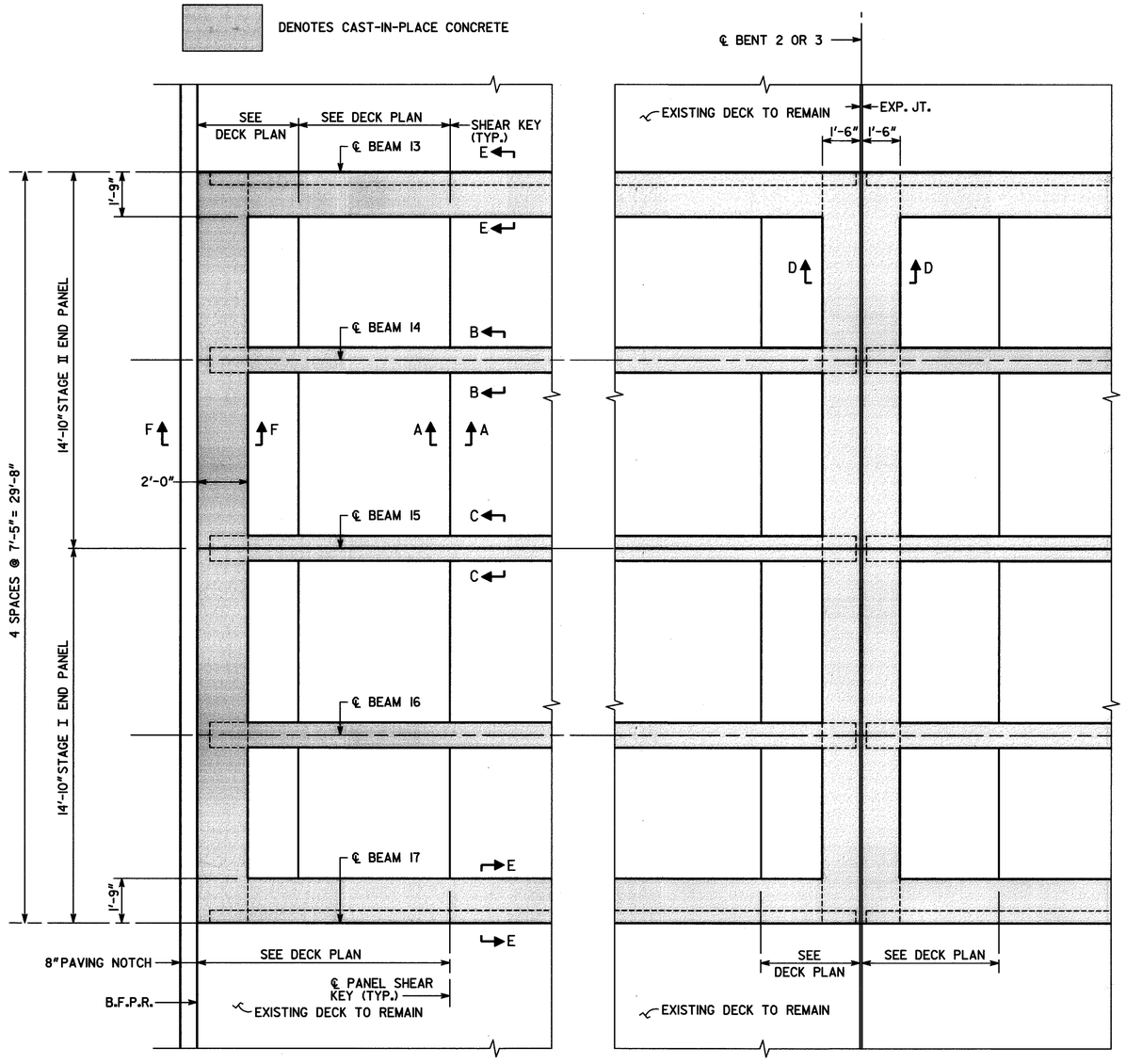


PARTIAL DECK PLAN

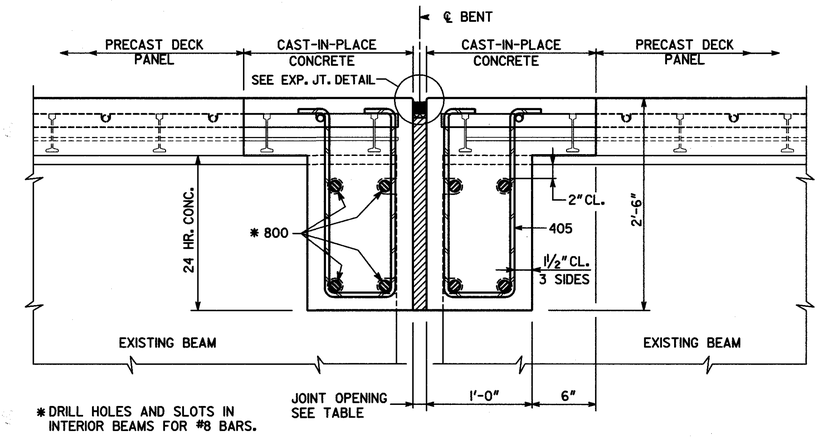


SECTION D-D

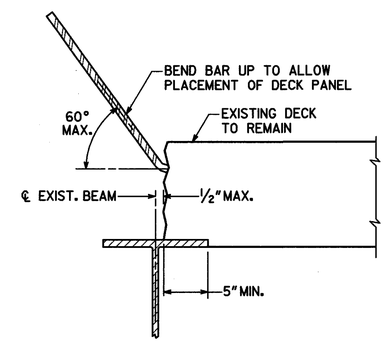


ONE SIDE REMOVED

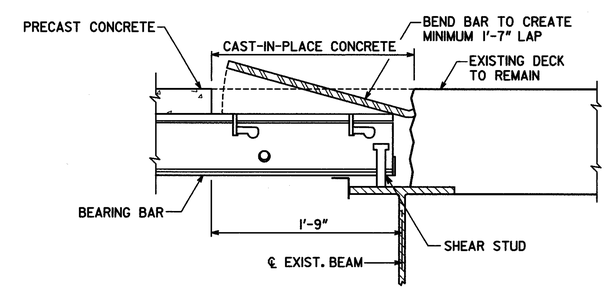


DECK PANEL PLACED

SECTION E-E

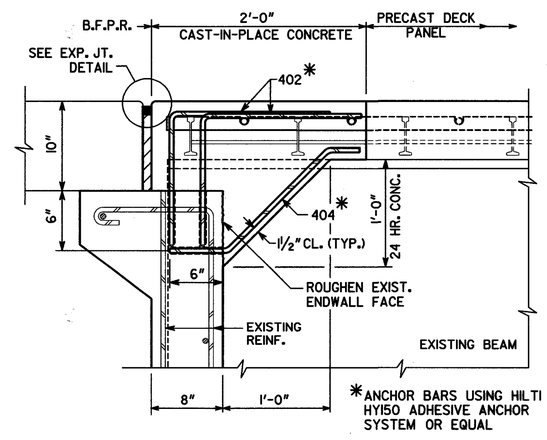


SECTION F-F

NOTES:

1. INCLUDE COST FOR ADHESIVE ANCHORS IN THE PRICE BID FOR REINFORCING STEEL.

BRIDGE NO. 1


JBT J.B. TRIMBLE, INC.
6445 Powers Ferry Rd.
Atlanta GA 30339
(770) 952-1022


GEORGIA
DEPARTMENT OF TRANSPORTATION
OPERATIONS DIVISION-OFFICE OF MAINTENANCE

DISTRICT 3 BRIDGE REPAIR
I-75 OVER CS 637 (OGLETHORPE STREET)
PRECAST DECK DETAIL
BIBB COUNTY CSNHS-M002-00(784)

SCALE: AS SHOWN DECEMBER 2005

| REVISIONS | BY | DATE |
|---|---|---|
| | | |

BRIDGE SHEET 7 OF 9

DESIGNED PJC CHECKED GLE REVIEWED BFR
DRAWN ITD DESIGN GROUP MAINTENANCE APPROVED BFR

4/29/2006

m:\tra\3l-4085 bridge maint, deck rehab\nhs-m002-00(784) bibb co\dgn\bridge\3l-4085(784)bibb(br1)\784bipd.dgn

...\784bipd.dgn 4/29/2006 9:32:45 AM