STATE	PROJECT NUMBER	SHEET NO.	TOTAL SHEETS
GA.	CSNHS-M002-00(784)	33	71

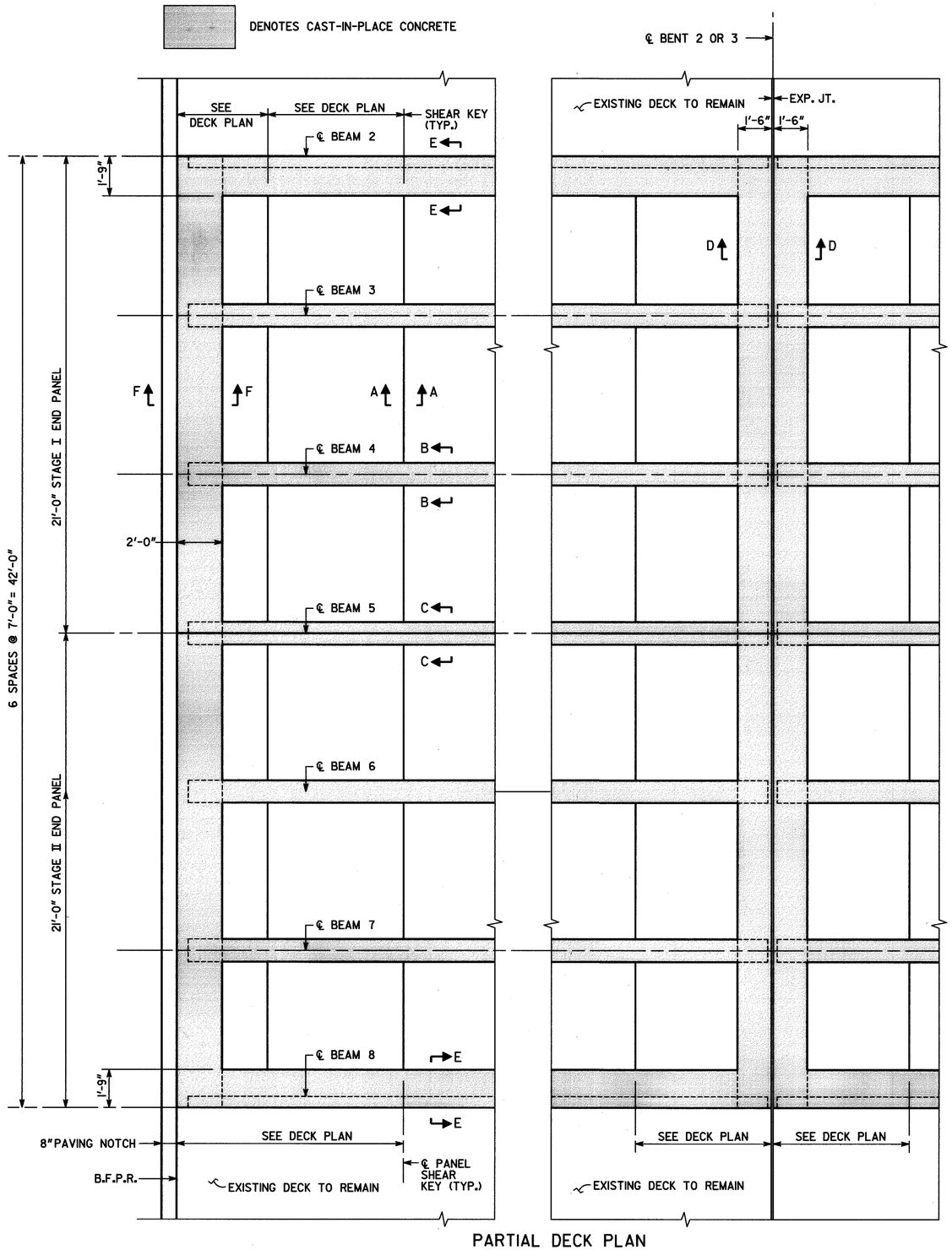

PARTIAL DECK PLAN

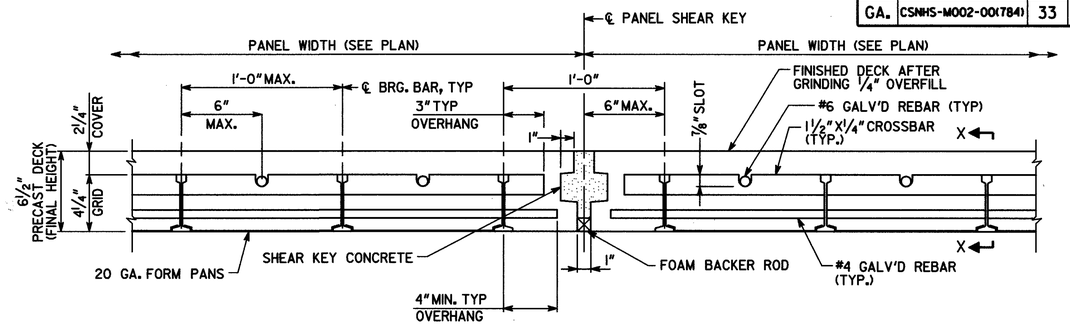

SECTION A-A

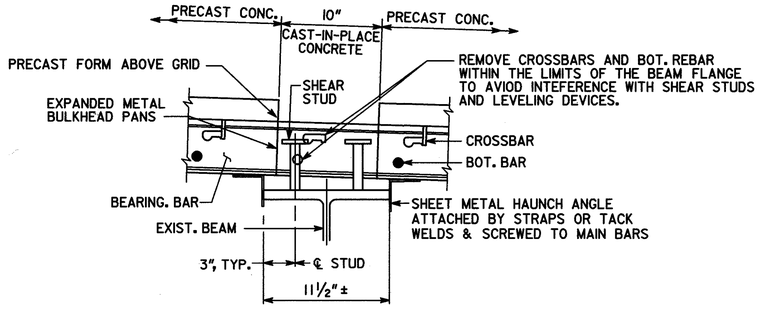

SECTION B-B

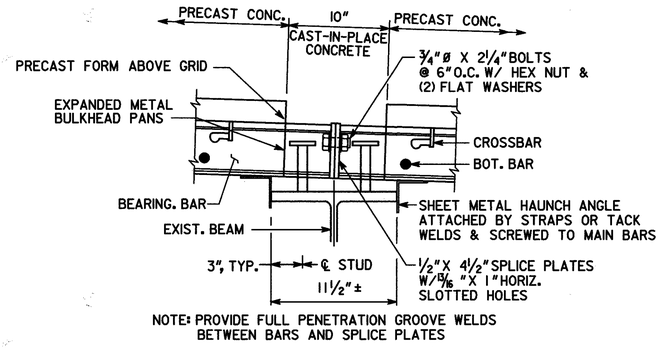

NOTE: PROVIDE FULL PENETRATION GROOVE WELDS BETWEEN BARS AND SPLICE PLATES

SECTION C-C

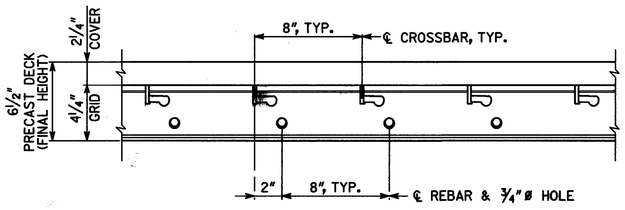

SECTION X-X

BRIDGE NO. 1

J.B. TRIMBLE, INC.
6445 Powers Ferry Rd.
Atlanta GA 30339
(770) 952-1022

GEORGIA
DEPARTMENT OF TRANSPORTATION
OPERATIONS DIVISION-OFFICE OF MAINTENANCE

DISTRICT 3 BRIDGE REPAIR
I-75 OVER CS 637 (OGLETHORPE STREET)
PRECAST DECK DETAIL
BIBB COUNTY CSNHS-M002-00(784)

SCALE: AS SHOWN DECEMBER 2005

BY	REVISIONS	DATE

BRIDGE SHEET 6 OF 9

DESIGNED PJC | CHECKED GLE | REVIEWED BFR
DRAWN ITD | DESIGN GROUP MAINTENANCE | APPROVED BFR

4/29/2006

m:\tra\3I-4085 bridge maint, deck rehab\nhs-m002-00(784) bibb co\dgn\bridge\3I-4085(784)bibb(br1)\784bipd2.dgn