STATE	PROJECT NUMBER	SHEET NO.	TOTAL SHEETS
GA.	CSNHS-M002-00(783)	47	70

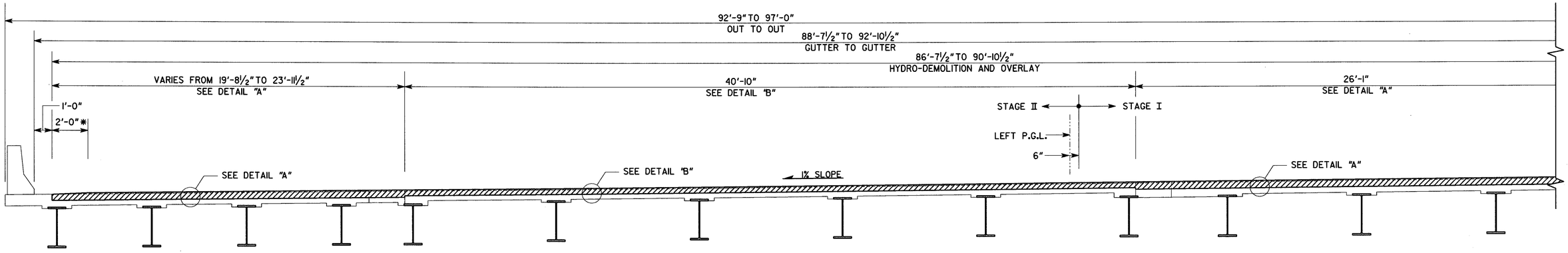

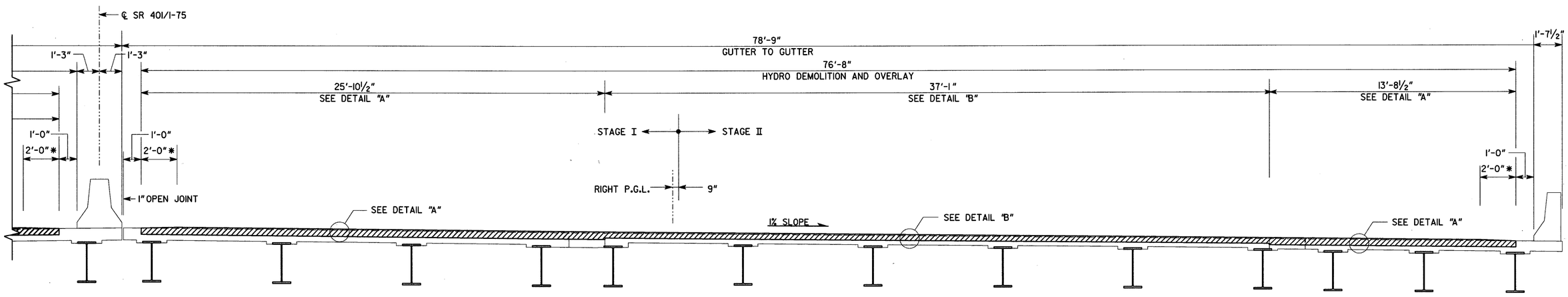

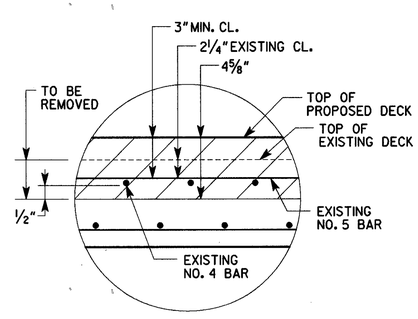

DETAIL "A"
ORIGINAL BRIDGE
NOT TO SCALE

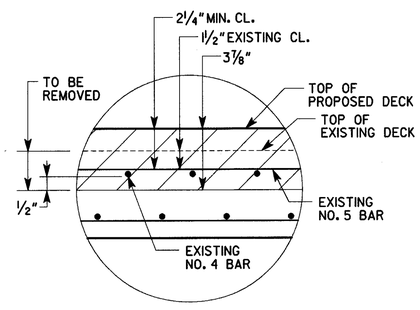

DETAIL "B"
WIDENED BRIDGE
NOT TO SCALE

NOTES:

1. CARE SHALL BE EXERCISED IN REMOVAL OF EXISTING CONCRETE TO RETAIN EXISTING REINFORCEMENT. ANY EXISTING REINFORCEMENT STEEL DAMAGED DURING REMOVAL SHALL BE REPLACED BY THE CONTRACTOR AT NO ADDITIONAL COST.
2. * OVERLAY TAPER TO EXISTING DECK.

BRIDGE NO. 3 LT. & RT.

Heath & Lineback Engineers
INCORPORATED
12 POWDER SPRINGS STREET, SUITE 240
MARIETTA, GEORGIA 30064

GEORGIA
DEPARTMENT OF TRANSPORTATION
OPERATIONS DIVISION - OFFICE OF MAINTENANCE

DATE | REVISIONS | BY

DECK SECTION
(HYDRO-DEMOLITION AND OVERLAY)
DISTRICT 3 BRIDGE DECK REHABILITATION
I-75 OVER SR7/US41

DOOLY COUNTY CSNHS-M002-00(783)

SCALE: ⅜"- 1'-0" AUGUST 2005

DESIGNED LAV | CHECKED FRB | REVIEWED GBL
DRAWN LAV | DESIGN GROUP | APPROVED

BRIDGE SHEET 6 OF 6

DWG NO. 35-20

J:/4019/4019.783/BRIDGE/SR7_US41/ ID093.39_DS-HYDRO.DGN