STATE	PROJECT NUMBER	SHEET NO.	TOTAL SHEETS
GA.	NHS-M002-00(782)	12	21

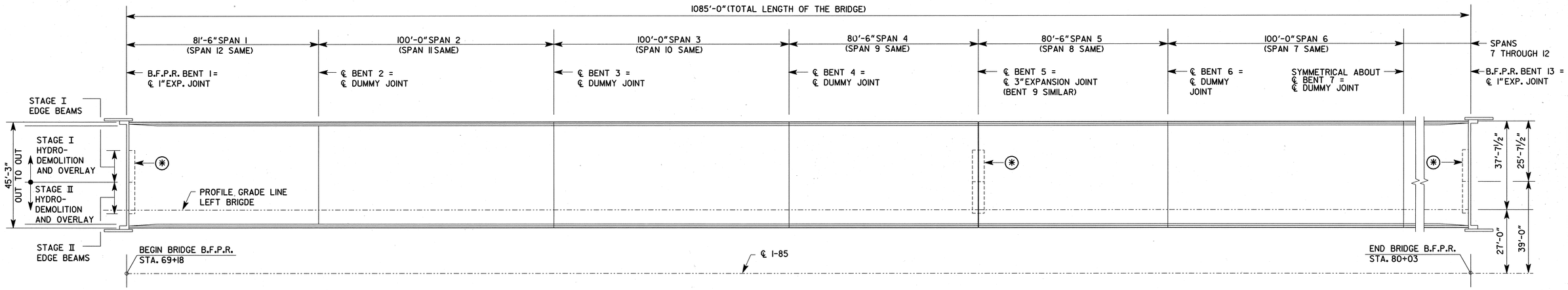

DECK PLAN

LEFT BRIDGE SHOWN
RIGHT BRIDGE SIMILAR

NOTE:

(*) EDGE BEAM CUT LINE FOR REMOVAL AND PLACEMENT. SEE SHEET 6 FOR DETAILS.

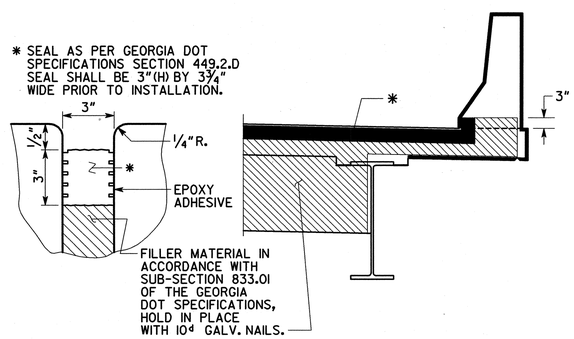

EXPANSION JOINT DETAILS @ BENTS 5 & 9

NOT TO SCALE

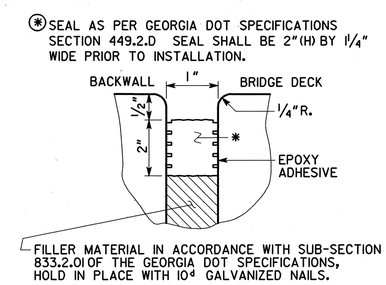

EXPANSION JOINT DETAIL @ BENTS 1 & 13

NOT TO SCALE

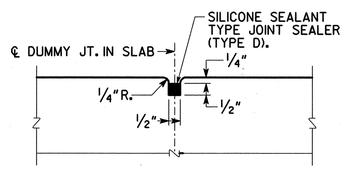

DUMMY JOINT DETAIL

NOT TO SCALE

BRIDGE NO. 1 RT & LT

Heath & Lineback Engineers INCORPORATED
12 POWDER SPRINGS STREET, SUITE 240
MARIETTA, GEORGIA 30064

GEORGIA
DEPARTMENT OF TRANSPORTATION
OPERATIONS DIVISION - OFFICE OF MAINTENANCE

DATE | REVISIONS | BY

DECK PLAN

DISTRICT 3 BRIDGE DECK REHABILITATION
I-85/SR 403 OVER CHATTAHOOCHEE RIVER

HARRIS COUNTY — NHS-M002-00(782)

SCALE: 1" = 20' — MAY 2005

DESIGNED LAV — CHECKED BKA/FRB — REVIEWED GBL
DRAWN LAV — DESIGN GROUP — APPROVED

BRIDGE SHEET 5 OF 7

DWG. NO. 35-05

J:\4019/4019.782/BRIDGE/WO782_DP.DGN