STATE	PROJECT NUMBER	SHEET NO.	TOTAL SHEETS
GA.	CSNHS-M002-00 (662)	17	26

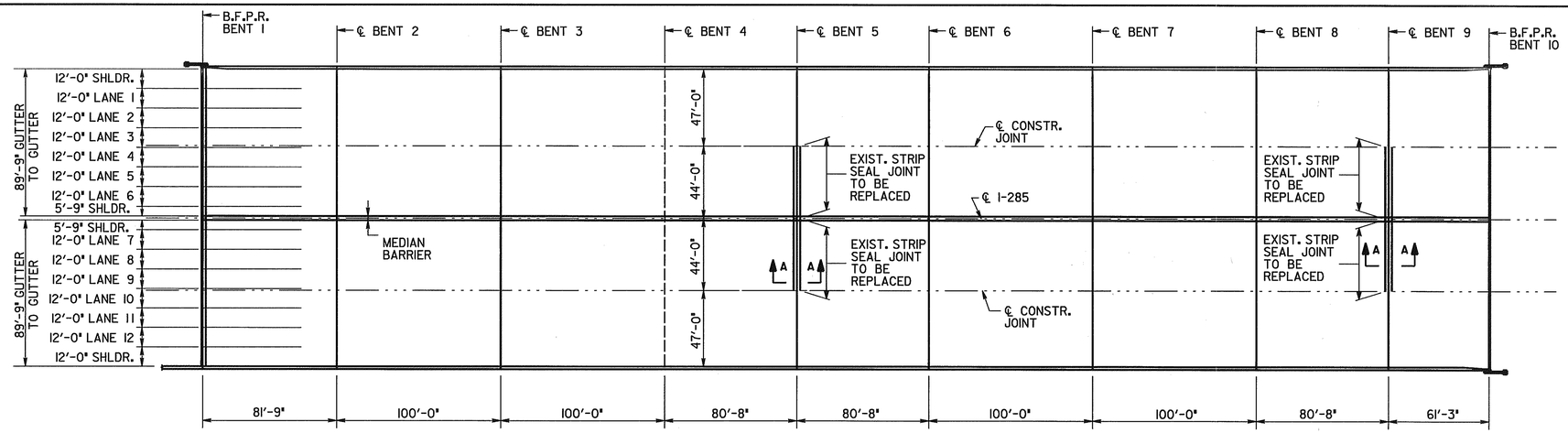

DECK PLAN

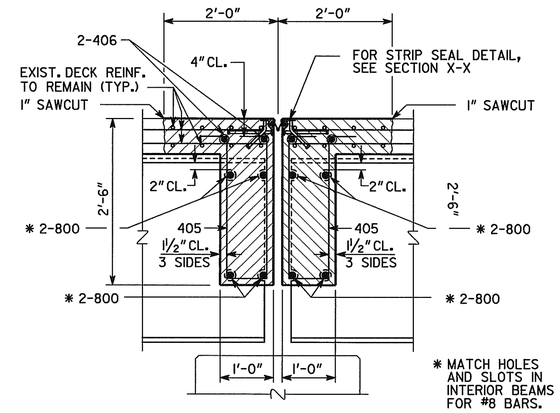

SECTION A-A

(BENTS 5 & 9)

DENOTES CONCRETE TO BE REMOVED

JOINT REPLACEMENT CONSTRUCTION SEQUENCE

PERFORM THE FOLLOWING IN ACCORDANCE WITH THE TRAFFIC CONTROL PLANS:

1. SAWCUT AND REMOVE EXISTING DECK SLAB AND EDGE BEAM CONCRETE TO LIMITS SHOWN ON PLANS.
2. REMOVE EXISTING EDGE BEAM AND TRANSVERSE DECK SLAB REINFORCEMENT.
3. CLEAN EXISTING DECK REINFORCEMENT TO REMAIN IN PLACE.
4. INSTALL NEW STRIP SEAL DECK JOINT AND PLACE DECK AND EDGE BEAM REINFORCEMENT. SPLICE STEEL RETAINERS BETWEEN EXISTING AND NEW SECTIONS USING FULL PENETRATION GROOVE WELDS.
5. FORM AND CAST EDGE BEAM AND DECK SLAB CONCRETE.

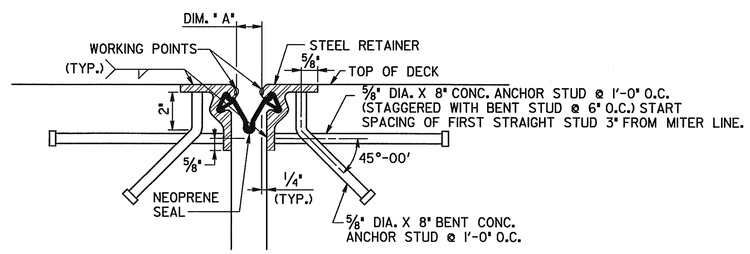

SECTION X-X

JOINT OPENING		
TEMP °F	DIM. "A" (IN) BENT 5	DIM. "A" (IN) BENT 9
0	4.19	3.13
10	3.91	2.94
20	3.63	2.76
30	3.35	2.57
40	3.06	2.38
50	2.78	2.19
60	2.50	2.00
70	2.22	1.81
80	1.94	1.62
90	1.65	1.46
100	1.37	1.24
110	1.09	1.06
120	0.81	0.87

NOTES

1. CARE SHALL BE EXERCISED IN REMOVAL OF EXISTING CONCRETE TO MAKE CUTS VERTICAL AND TO RETAIN EXISTING REINFORCEMENT. ANY EXISTING REINFORCEMENT STEEL DAMAGED DURING REMOVAL SHALL BE REPLACED BY THE CONTRACTOR AT NO ADDITIONAL COST.

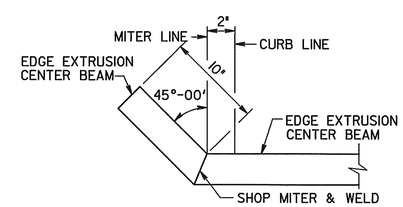

CURB DETAIL

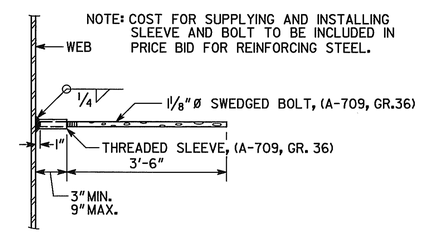

EDGE BEAM BAR LAP DETAIL

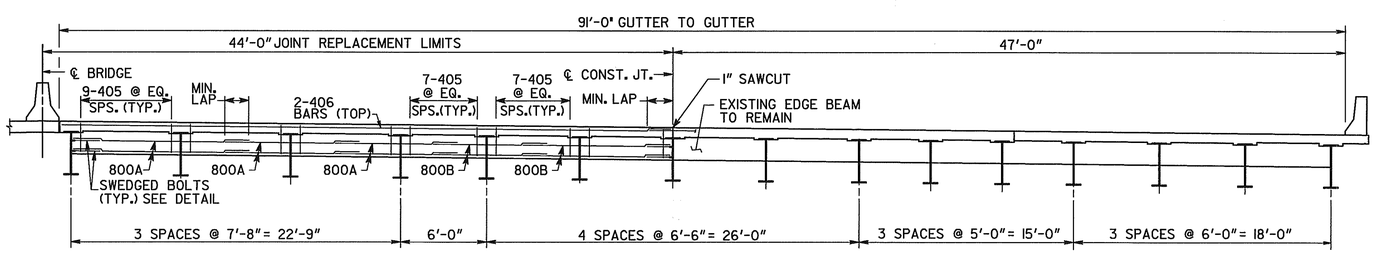

SECTION AT EDGE BEAM

MIN. LAP
#8 3'-8"
#4 2'-0"

LOCATION	NO. OF LOC.	MARK	LENGTH FT.	LENGTH IN.	NO. BARS REQ'D.	TYPE	A	G	B FT.	B IN.	C FT.	C IN.	D FT.	D IN.	E FT.	E IN.	F FT.	F IN.	H FT.	H IN.	J FT.	J IN.	K FT.	K IN.	N	θ
BENT 5 OR 9	2																									
		405	5-6		96	31	4	4	0- 9		2- 0		2- 0													
		406	42-5		4	1																				
		800A	11-9		24	1																				
		800B	10-9		16	1																				

C:\DGN\313029\662\BRI\662B4DS.DGN 4-1-04 ITD

BRIDGE NO. 4

J.B. TRIMBLE, INC.
6445 Powers Ferry Rd.
Atlanta GA 30339
(770) 952-1022

GEORGIA
DEPARTMENT OF TRANSPORTATION
OPERATIONS DIVISION-OFFICE OF MAINTENANCE

DISTRICT 7 BRIDGE REPAIR (DECK REHABILITATION)
I-285 OVER CHATTAHOOCHEE RIVER
DECK SECTIONS

COBB COUNTY CSNHS-M002-00 (662)

SCALE: NO SCALE U.N.O. APRIL 2004

BRIDGE SHEET 2 OF 2

REVISIONS	BY	DATE

DESIGNED PJC | CHECKED GLE | REVIEWED EHG
DRAWN ITD | DESIGN GROUP MAINTENANCE | APPROVED STH

2/20/2008 1:37:52 PM \\GDOT-DSN1\GOPLOT\QCF\Road_Design_Tiff-18x12_to_Tiff-36x24.qcf wnguyen C:\Documents and Settings\wnguyen\Desktop\M002662\Construction\Plan Sheet\M002662_0017.tif GO-RD-Plans-Review