STATE	PROJECT NUMBER	SHEET NO.	TOTAL SHEETS
GA.	CSNHS-M002-00 (662)	14	25

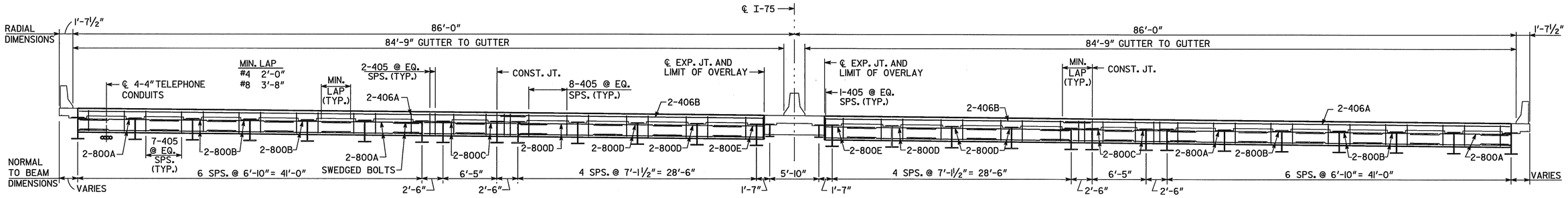

SECTION THRU EDGE BEAM
(LOOKING AHEAD)

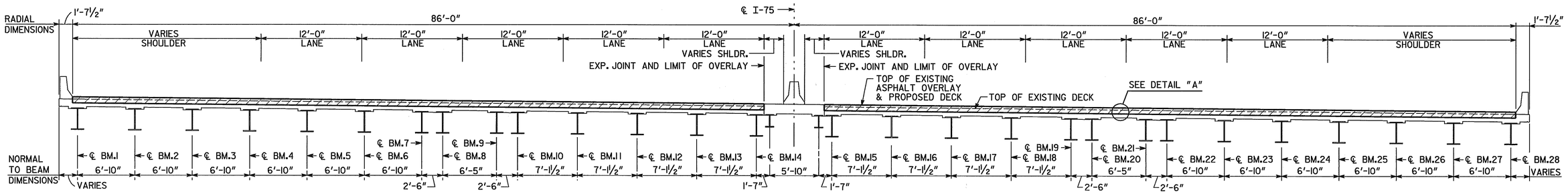

SECTION THRU SLAB
(LOOKING AHEAD)

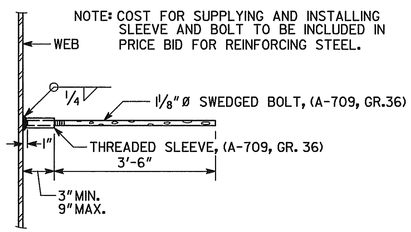

NOTE: COST FOR SUPPLYING AND INSTALLING SLEEVE AND BOLT TO BE INCLUDED IN PRICE BID FOR REINFORCING STEEL.

EDGE BEAM BAR LAP DETAIL

** THESE TRANSITION ZONES SHALL BE EXEMPT FROM THE PROFILOGRAPH REQUIREMENTS OF SECTION 500.3.06.E OF THE STANDARD SPECIFICATIONS.

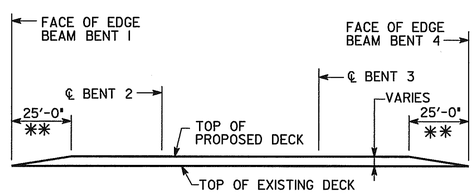

LONGITUDINAL SECTION
(END BRIDGE TRANSITION DETAILS)
(NO SCALE)

NOTE :
REINFORCING STEEL MINIMUM CLEARANCE DOES NOT APPLY IN TRANSITION ZONES.

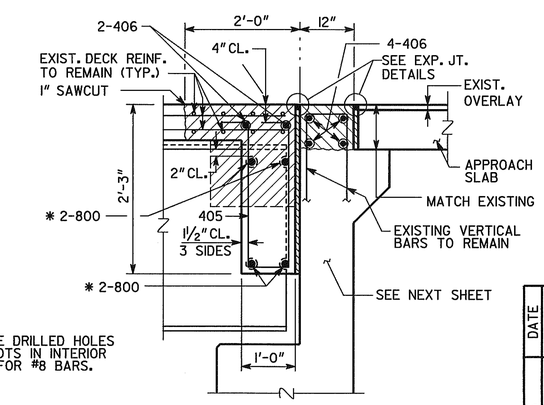

* PROVIDE DRILLED HOLES AND SLOTS IN INTERIOR BEAMS FOR #8 BARS.

DENOTES CONCRETE TO BE REMOVED

SECTION THRU EDGE BEAM
(BENTS 1 AND 4)

NOTE:
1. REMOVE ALL ASPHALT FROM THE BRIDGE DECK PRIOR TO INSTALLING OVERLAY.

LOCATION	NO. OF LOC.	MARK	LENGTH FT.	LENGTH IN.	NO. BARS REQ'D.	TYPE	A	G	B FT.	B IN.	C FT.	C IN.	D FT.	D IN.	C FT.	C IN.	D FT.	D IN.
BENT 1 OR 4	2																	
		405	5	0	172	31	4	4	0	9	1	9	1	9				
		406A	56	0	12	1												
		406B	33	8	12	1												
		800A	12	7	16	1												
		800B	10	5	24	1												
		800C	7	8	16	1												
		800D	11	7	24	1												
		800E	6	6	8	1												
BENT 1 SB	1																	
BWALL/APPR		500A	27	0	7	1												
		500B	33	0	7	1												
		504	3	11	57	36			1	6	1	4	0	2	0	10	0	10
		509A	27	0	16	1												
		509B	33	0	16	1												
		700	10	0	86	1												

C:\DGN\313029\662\BR3\662B3 MD.DGN 2-3-04 ITD

BRIDGE SHEET 3 OF 4

BRIDGE NO. 3

J.B. TRIMBLE, INC.
6445 Powers Ferry Rd.
Atlanta GA 30339
(770) 952-1022

GEORGIA
DEPARTMENT OF TRANSPORTATION
OPERATIONS DIVISION-OFFICE OF MAINTENANCE

DISTRICT 7 BRIDGE REPAIR (DECK REHABILITATION)
I-75 OVER COLLIER ROAD
TYPICAL SECTIONS

FULTON COUNTY CSNHS-M002-00 (662)

SCALE: NO SCALE U.N.O. APRIL 2004

DATE	REVISIONS	BY

DESIGNED PJC CHECKED GLE REVIEWED EHG
DRAWN ITD DESIGN GROUP MAINTENANCE APPROVED STH

2/20/2008 1:38:01 PM \\GDOT-DSN1\GOPLOT\QCF\Road_Design_Tiff-18x12_to_Tiff-36x24.qcf wnguyen C:\Documents and Settings\wnguyen\Desktop\M002662\Construction\Plan Sheet\M002662_0014.tif GO-RD-Plans-Review