STATE	PROJECT NUMBER	SHEET NO.	TOTAL SHEETS
GA.	CSNHS-M002-00 (662)	13	25

NOTE:
LANE AND SHOULDER WIDTH DIMENSIONS ARE ESTIMATED FROM ORIGINAL DESIGN PLANS. ACTUAL WIDTHS SHALL BE VERIFIED BY THE CONTRACTOR PRIOR TO CONSTRUCTION.

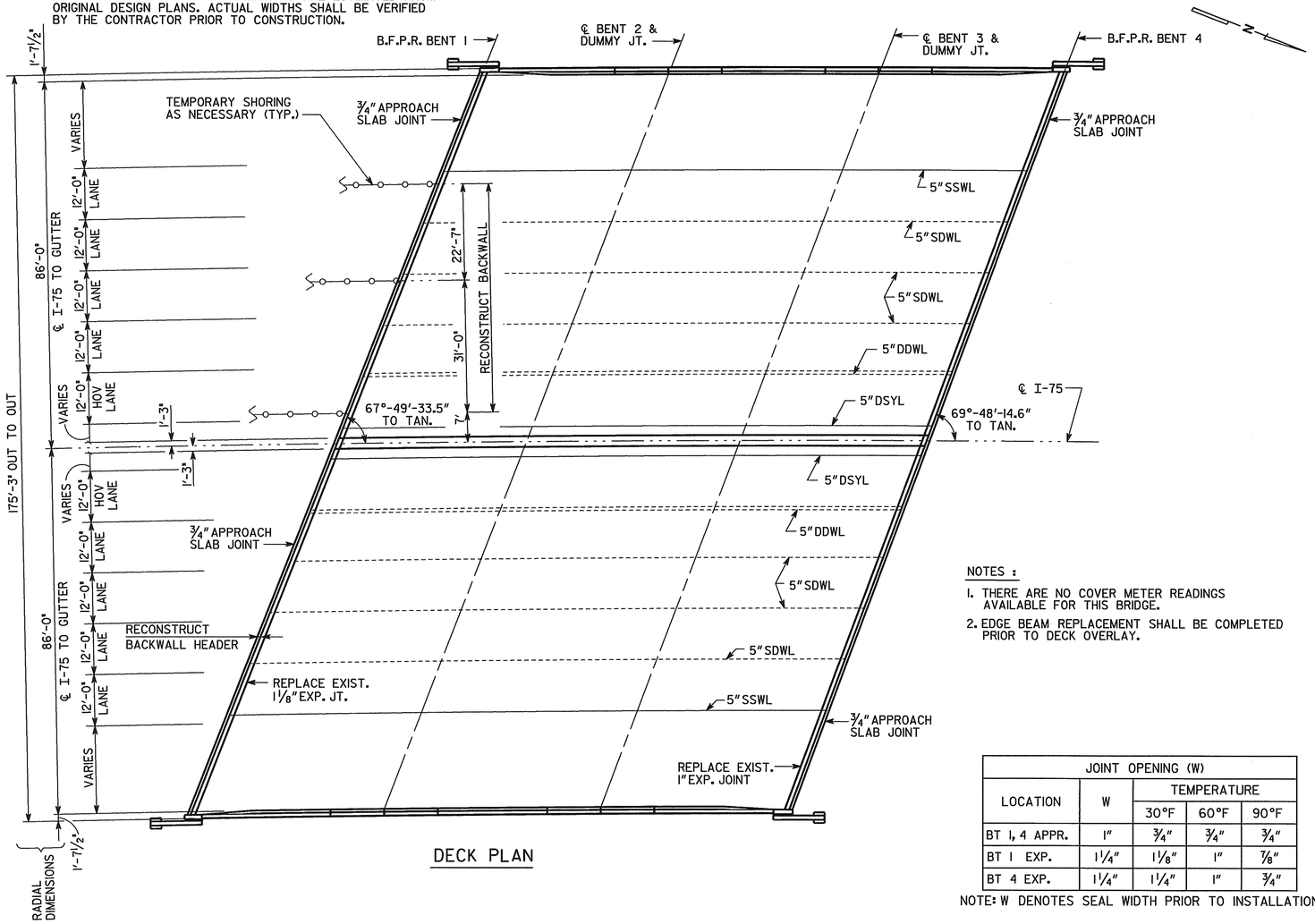

DECK PLAN

NOTES :

1. THERE ARE NO COVER METER READINGS AVAILABLE FOR THIS BRIDGE.
2. EDGE BEAM REPLACEMENT SHALL BE COMPLETED PRIOR TO DECK OVERLAY.

SUMMARY OF QUANTITIES

PAY ITEM NUMBER	QUANTITY	UNIT	PAY ITEM
449-1620	376	LF	LOW-DENSITY, CLOSED-CELL, X-LINKED, ETHYLENE VINYL ACETATE, POLYETHYLENE COPOLYMER, NITROGEN-BLOWN SEAL, BR NO-3, BENT NO-1
449-1620	368	LF	LOW-DENSITY, CLOSED-CELL, X-LINKED, ETHYLENE VINYL ACETATE, POLYETHYLENE COPOLYMER, NITROGEN-BLOWN SEAL, BR NO-3, BENT NO-4
500-0100	2504	SY	GROOVED CONCRETE
503-1600	27	CY	FOUR HOUR ACCELERATED STRENGTH CONC
504-0600	46	CY	TWENTY-FOUR HOUR ACCELERATED STRENGTH CONC
511-3000	LUMP	LS	SUPERSTR REINF STEEL, BR NO-3 (12000)
519-0400	2604	SY	CONCRETE OVERLAY, PORTLAND CEMENT, VARB THK
521-1000	500	SF	PATCHING CONCRETE BRIDGE DECK
528-0750	2900	LF	EPOXY SEALING OF CONCRETE CRACKS
540-1202	LUMP		REMOVAL OF PARTS OF EXISTING BR, BR NO-3

DESIGN DATA

SPECIFICATIONS ---------- AASHTO 1996 INCLUDING 1997 THROUGH 2002 INTERIMS

TYPICAL HS20-44 AND/OR MILITARY LOADING ---------- IMPACT INCLUDED

FUTURE PAVING ALLOWANCE ---------- 30 LBS PER SQ FT

EDGE BEAM CONCRETE: 24 HOUR ACCELERATED STRENGTH ---------- f'_c = 3,500 PSI

BACKWALL CONCRETE: 4 HOUR ACCELERATED STRENGTH ---------- f'_c = 3,000 PSI

APPROACH SLAB CONCRETE: 4 HOUR ACCELERATED STRENGTH ---------- f'_c = 3,000 PSI

REINFORCEMENT STEEL ---------- GRADE 60, f_y = 60,000 PSI

JOINT OPENING (W)				
LOCATION	W	TEMPERATURE		
		30°F	60°F	90°F
BT 1, 4 APPR.	1"	¾"	¾"	¾"
BT 1 EXP.	1¼"	1⅛"	1"	⅞"
BT 4 EXP.	1¼"	1¼"	1"	¾"

NOTE: W DENOTES SEAL WIDTH PRIOR TO INSTALLATION

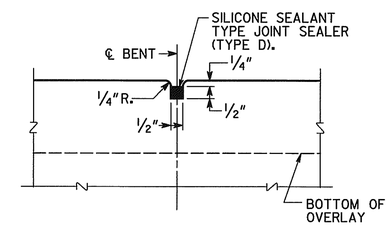

DUMMY JOINT DETAIL

NO SCALE

5" SSWL - 5" SINGLE SOLID WHITE LINE
5" SDWL - 5" SINGLE DASHED WHITE LINE
5" SSYL - 5" SINGLE SOLID YELLOW LINE
5" DDWL - 5" DOUBLE DASHED WHITE LINE

NOTE: TEMPORARY STRIPING SHALL BE USED DURING CONSTRUCTION. PERMANENT STRIPING SHALL BE DONE AFTER ALL DECK OVERLAY WORK IS COMPLETED. THE COST OF TEMPORARY STRIPING SHALL BE INCLUDED IN THE COST FOR TRAFFIC CONTROL.

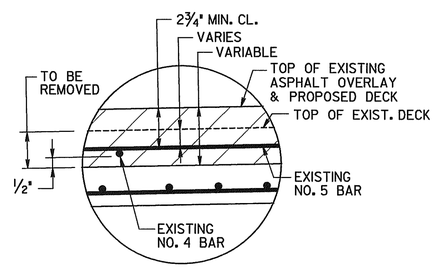

DETAIL "A"

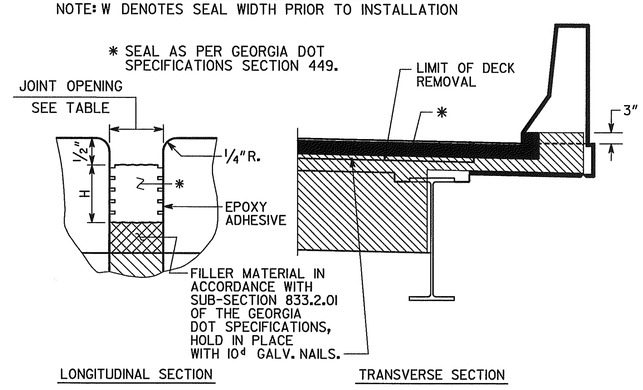

EXPANSION JOINT DETAILS

BRIDGE NO. 3

J.B. TRIMBLE, INC.
6445 Powers Ferry Rd.
Atlanta GA 30339
(770) 952-1022

GEORGIA
DEPARTMENT OF TRANSPORTATION
OPERATIONS DIVISION-OFFICE OF MAINTENANCE

DISTRICT 7 BRIDGE REPAIR (DECK REHABILITATION)
I-75 OVER COLLIER ROAD
DECK PLAN

FULTON COUNTY CSNHS-M002-00 (662)

SCALE: NO SCALE U.N.O. APRIL 2004

BY	REVISIONS	DATE

BRIDGE SHEET 2 OF 4

DESIGNED PJC | CHECKED GLE | REVIEWED EHG
DRAWN ITD | DESIGN GROUP MAINTENANCE | APPROVED STH

C:\DGN\313029\662\BR3\662B3DP.DGN 2-3-04 ITD

2/20/2008 1:38:04 PM \\GDOT-DSN1\GOPLOT\QCF\Road_Design_Tiff-18x12_to_Tiff-36x24.qcf wnguyen C:\Documents and Settings\wnguyen\Desktop\M002662\Construction\Plan Sheet\M002662_0013.tif GO-RD-Plans-Review