STATE	PROJECT NUMBER	SHEET NO.	TOTAL SHEETS
GA.	CSNHS-M002-00 (662)	11	25

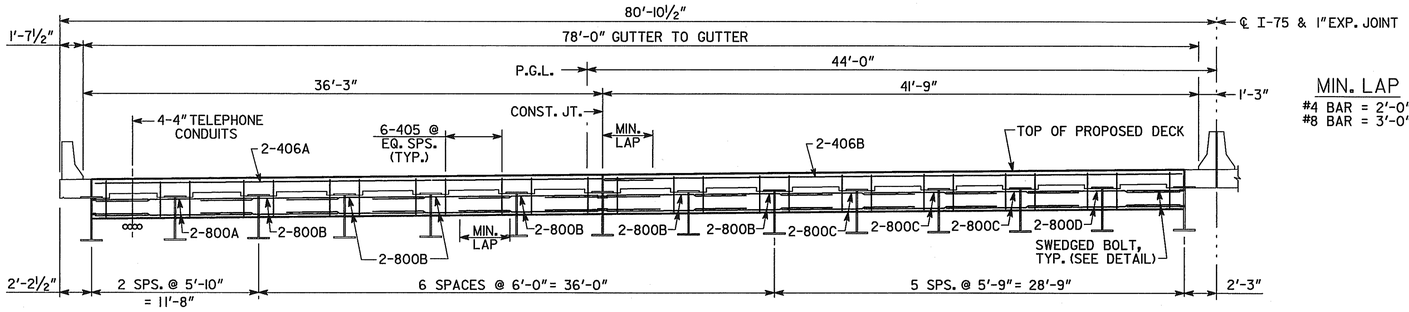

SECTION THRU EDGE BEAM
(LOOKING AHEAD)

MIN. LAP
#4 BAR = 2'-0"
#8 BAR = 3'-0"

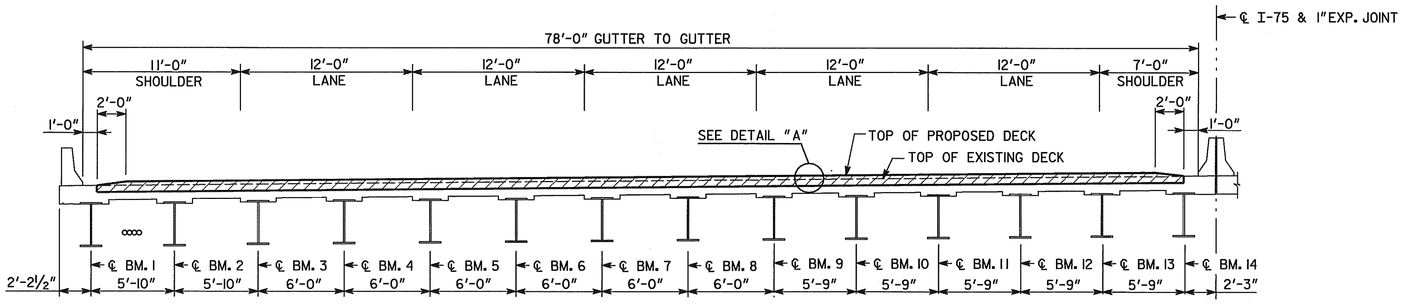

SECTION THRU SLAB
(LOOKING AHEAD)

** THESE TRANSITION ZONES SHALL BE EXEMPT FROM THE PROFILOGRAPH REQUIREMENTS OF SECTION 500.3.06.E OF THE STANDARD SPECIFICATIONS.

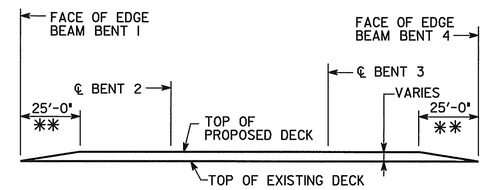

LONGITUDINAL SECTION
(END BRIDGE TRANSITION DETAILS)
(NO SCALE)

NOTE :
REINFORCING STEEL MINIMUM CLEARANCE DOES NOT APPLY IN TRANSITION ZONES.

LOCATION	NO. OF LOC.	MARK	LENGTH FT.	LENGTH IN.	NO. BARS REQ'D.	TYPE	A	G	B FT.	B IN.	C FT.	C IN.	D FT.	D IN.
BENT 1 OR 4	2													
		405	5- 0		78	31	4	4	0- 9		1- 9		1- 9	
		406A	37-10		6	1								
		406B	40- 6		6	1								
		800A	11- 4		4	1								
		800B	9- 2		24	1								
		800C	8-11		12	1								
		800D	11- 2		4	1								

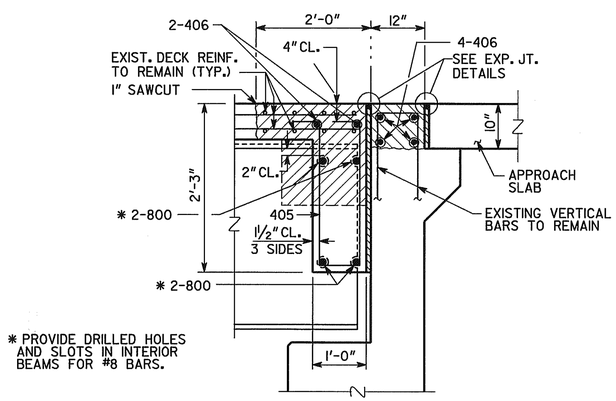

* PROVIDE DRILLED HOLES AND SLOTS IN INTERIOR BEAMS FOR #8 BARS.

DENOTES CONCRETE TO BE REMOVED

SECTION THRU EDGE BEAM
(BENTS 1 AND 4)

NOTE: COST FOR SUPPLYING AND INSTALLING SLEEVE AND BOLT TO BE INCLUDED IN PRICE BID FOR REINFORCING STEEL.

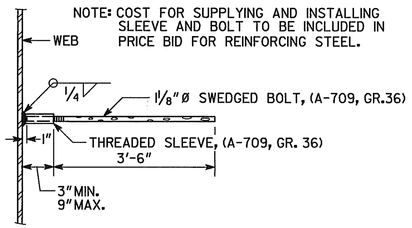

EDGE BEAM BAR LAP DETAIL

BRIDGE NO. 2

J.B. TRIMBLE, INC.
6445 Powers Ferry Rd.
Atlanta GA 30339
(770) 952-1022

GEORGIA
DEPARTMENT OF TRANSPORTATION
OPERATIONS DIVISION-OFFICE OF MAINTENANCE

DISTRICT 7 BRIDGE REPAIR (DECK REHABILITATION)
I-75 S.B. OVER I-285 E.B. RAMP
MISCELLANEOUS DETAILS

COBB COUNTY CSNHS-M002-00 (662)

SCALE: NO SCALE U.N.O. APRIL 2004

DESIGNED PJC CHECKED GLE REVIEWED EHG
DRAWN ITD DESIGN GROUP MAINTENANCE APPROVED STH

REVISIONS | DATE | BY

BRIDGE SHEET 3 OF 3

C:\DGN\313029\662\BR2\662B2DS.DGN 2-9-04 ITD

2/20/2008 1:38:09 PM \\GDOT-DSN1\GOPLOT\QCF\Road_Design_Tiff-18x12_to_Tiff-36x24.qcf wnguyen C:\Documents and Settings\wnguyen\Desktop\M002662\Construction\Plan Sheet\M002662_0011.tif GO-RD-Plans-Review