STATE	PROJECT NUMBER	SHEET NO.	TOTAL SHEETS
GA.	HS-M002-00(434)	313	379

UPSTREAM TERMINAL

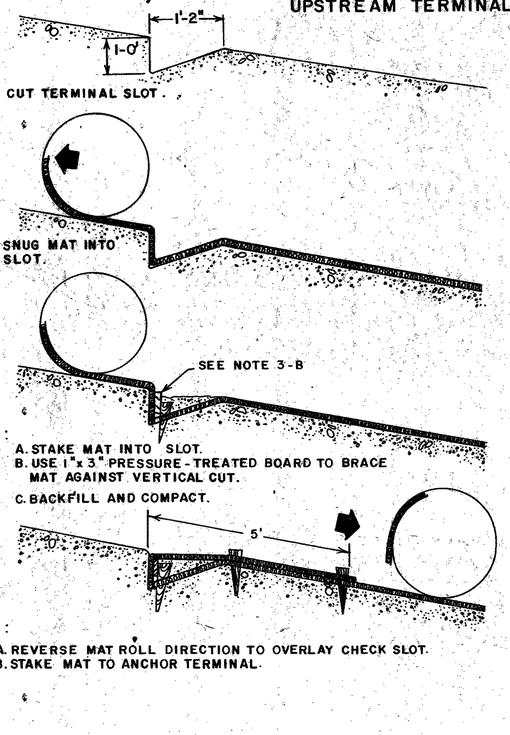

TRANSVERSE CHECK SLOT

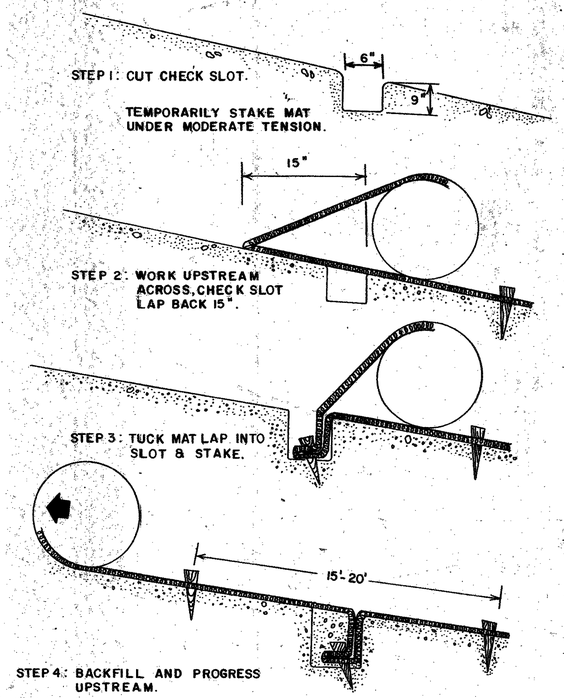

DOWNSTREAM TERMINAL

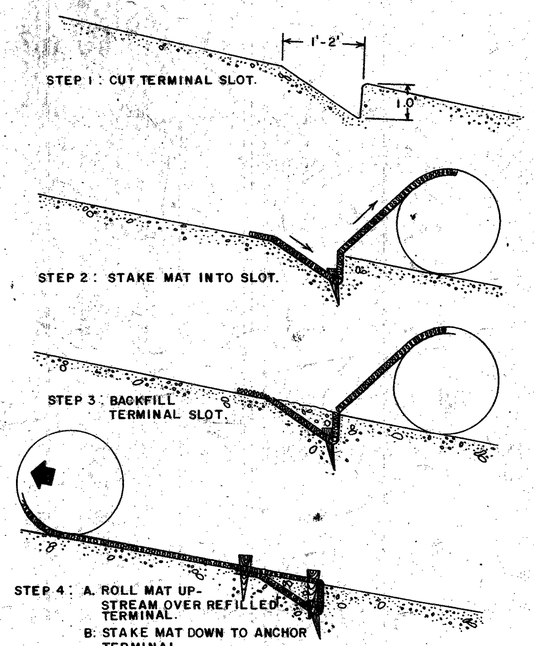

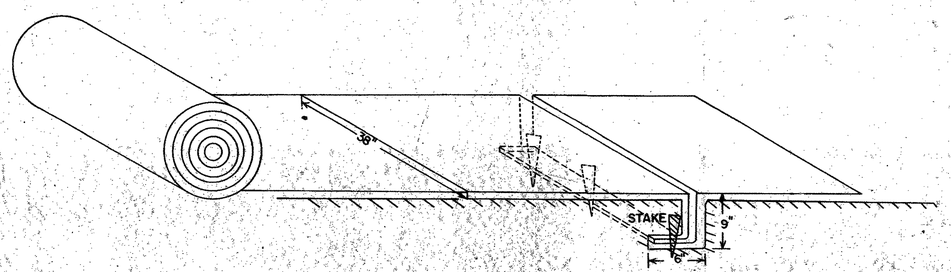

PICTORIAL VIEW OF TRANSVERSE SLOT

SEQUENTIAL ROLL RUN OUT IN CHANNELS

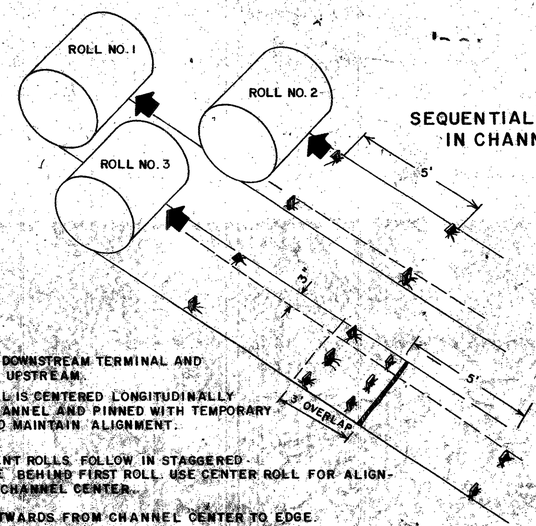

1. START AT DOWNSTREAM TERMINAL AND PROGRESS UPSTREAM.
2. FIRST ROLL IS CENTERED LONGITUDINALLY IN MID CHANNEL AND PINNED WITH TEMPORARY STAKES TO MAINTAIN ALIGNMENT.
3. SUBSEQUENT ROLLS FOLLOW IN STAGGERED SEQUENCE BEHIND FIRST ROLL. USE CENTER ROLL FOR ALIGNMENT TO CHANNEL CENTER.
4. WORK OUTWARDS FROM CHANNEL CENTER TO EDGE.
5. USE 3" OVERLAP AND STAKE AT 5' INTERVAL ALONG SEAMS.
6. USE 3" OVERLAPS AND SHINGLE DOWNSTREAM TO CONNECT LINING AT ROLL ENDS.

CONSTRUCTION DETAILS

PERMANENT SOIL REINFORCING MAT

DRAWN BY: K.L.J. AUG. 1992

D-35