STATE	PROJECT NUMBER	NO.	SHEETS
GA.	NHS-M002-00(434)	281	379

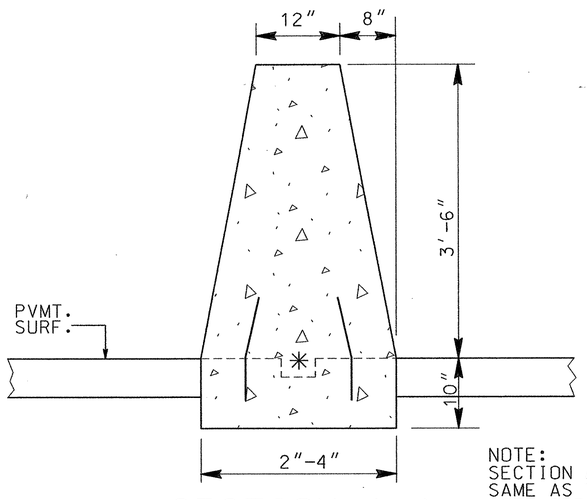

NOTE:
SECTION A-A IS THE SAME AS TYPE S-1. (SEE SEPARATE SHEET)

SECTION A-A

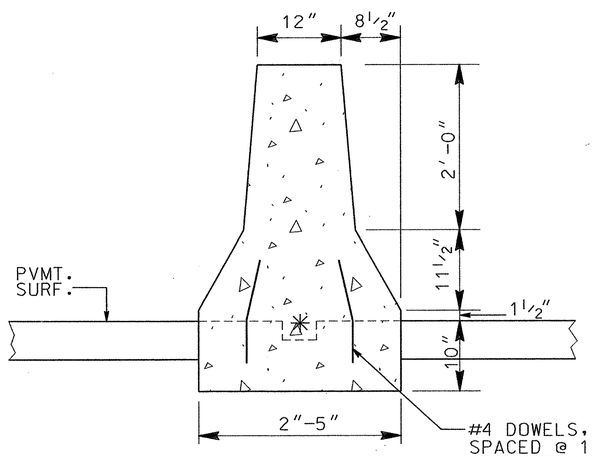

SECTION B-B

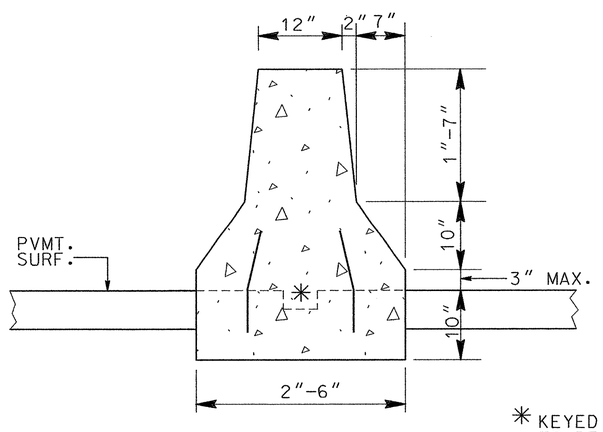

NOTE:
SECTION C-C IS THE SAME AS TYPE 20. (SEE STD. NO. 4940)

SECTION C-C

✳ KEYED CONSTR. JT. (OPTIONAL) TO BE THE SIZE OF A NOM. 2"x4".

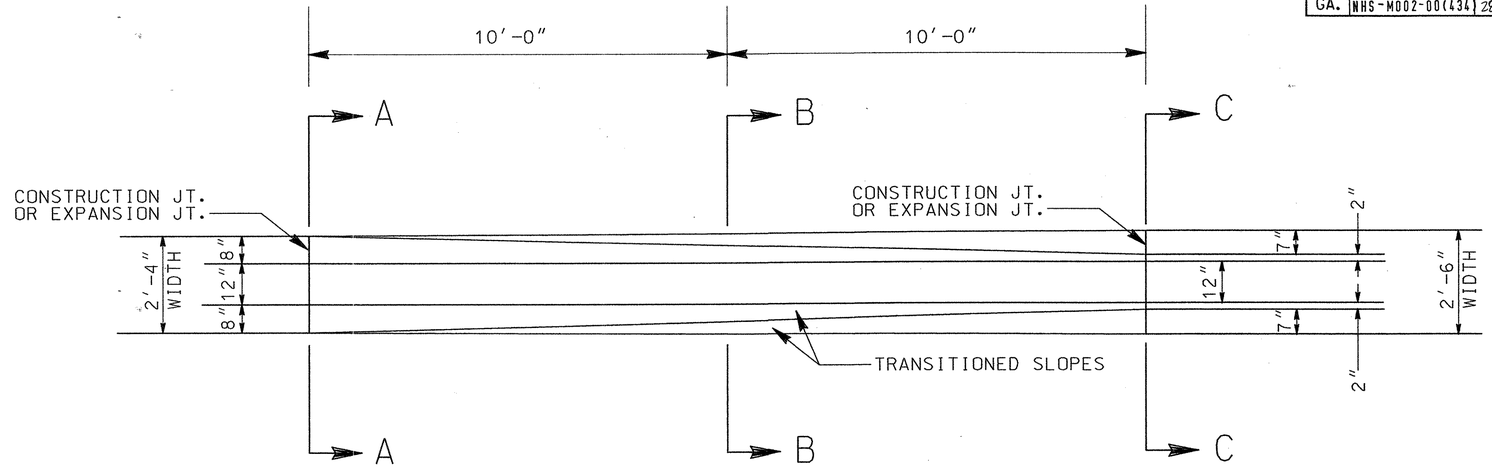

PLAN VIEW

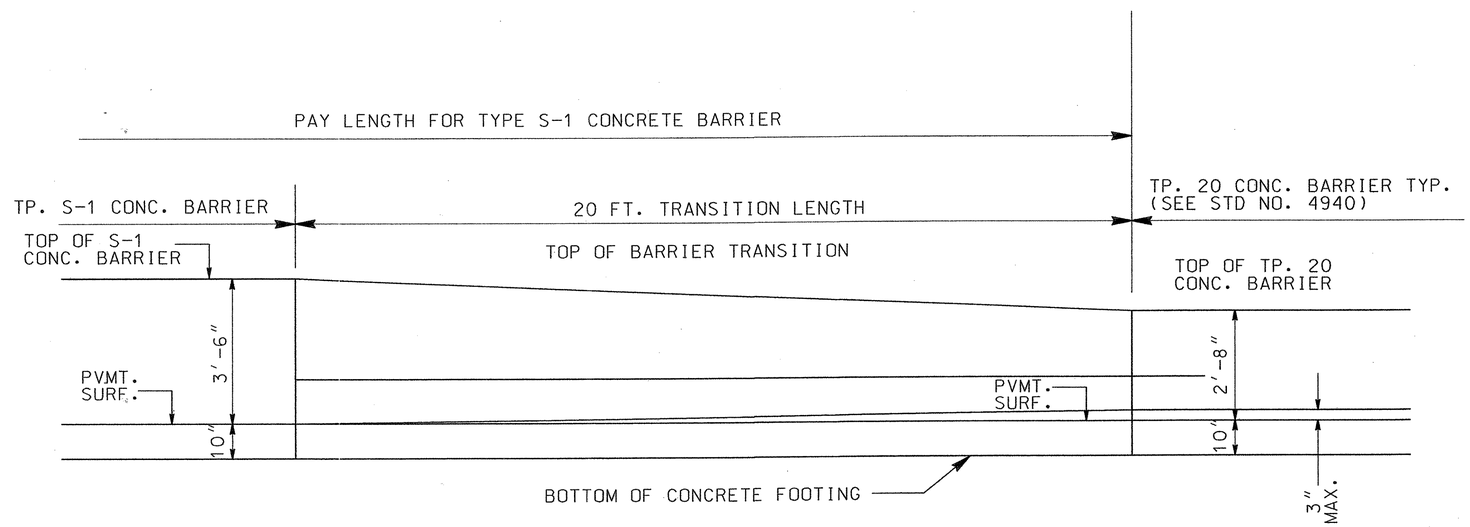

ELEVATION

NOTE:
DETAILS, NOTES, ETC. NOT SHOWN HEREON SHALL BE ACCORDING TO STANDARD NO. 4940.

DATE	REVISION	BY

DEPARTMENT OF TRANSPORTATION
STATE OF GEORGIA

SPECIAL DESIGN

CONCRETE MEDIAN BARRIERS
TRANSITION TYPE S-I TO TYPE 20

NO SCALE — REV. & REDR. MARCH, 2001

DESIGNED
TRACED
CHECKED
REVISED

NUMBER

4/26/01 10:34:18 AM \\GDOT-DSN1\GDPLOT\OCF\qo_8855_mytar.gdt drdbyd M:\David\working\s-1_to_type20.prt GO-R06

8