Fri Nov 19 15:31:44 1999 \\GDOT_GO_SV20\OCF\OSD_Mulbar.ocf postg M:\David\working\r-1.brf

STATE	PROJECT NUMBER	SHEET NO.	TOTAL SHEETS
GA.	NHS-M002-00(434)	278	379

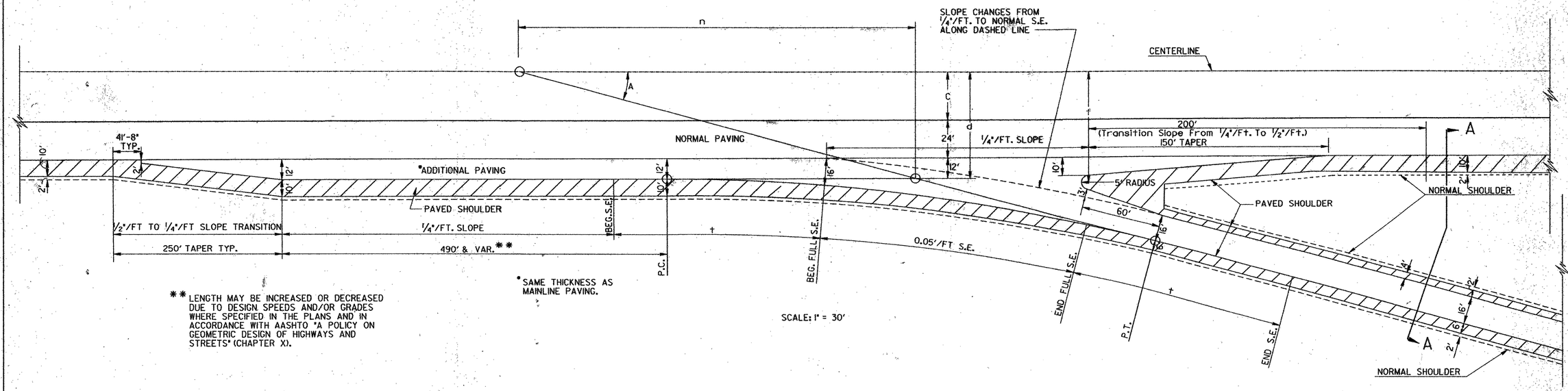

** LENGTH MAY BE INCREASED OR DECREASED DUE TO DESIGN SPEEDS AND/OR GRADES WHERE SPECIFIED IN THE PLANS AND IN ACCORDANCE WITH AASHTO "A POLICY ON GEOMETRIC DESIGN OF HIGHWAYS AND STREETS" (CHAPTER X).

* SAME THICKNESS AS MAINLINE PAVING.

SCALE: 1" = 30'

C = 1/2 MEDIAN WIDTH
d = C+24'+12'
f = C+24'+15'
$n = \frac{d}{\text{Tan. } A}$
D = 5^ - 00' (For Diamond Interchanges)
S.E. = 0.05'/Ft.
t = 125'

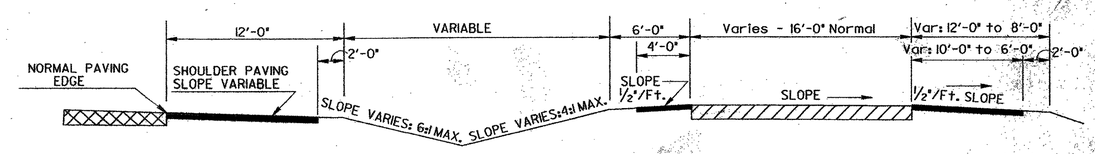

SECTION A-A

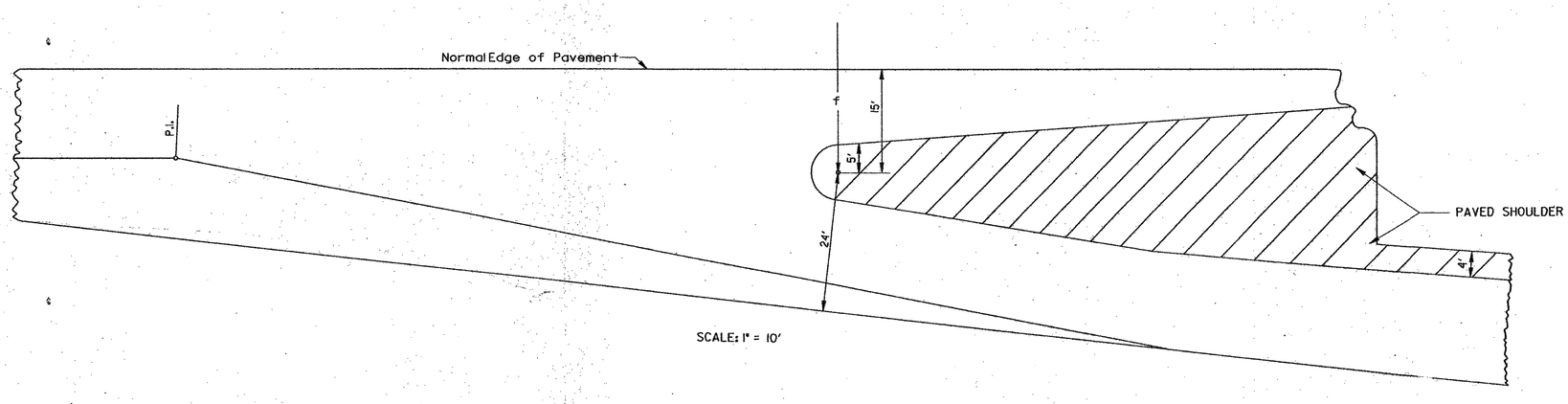

SCALE: 1" = 10'

DETAIL OF EXIT RAMPS FOR INTERCHANGES

REDRAWN NOV., 1999

R 1