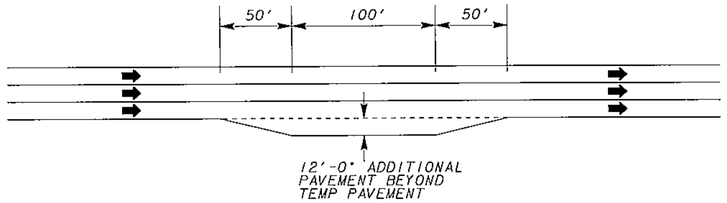

NOTE: USE THE SAME PAVING STRUCTURE DEPTHS AND MATERIALS AS THE TEMPORARY PAVEMENT

NOTE: CONTRACTOR TO SIGN REFUGE AREAS AT ADVANCE LOCATIONS AS WELL AS AT EACH LOCATION PER SECTION 150 OR AS DIRECTED BY ENGINEER. PRICE TO BE INCLUDED IN THE BID PROCE FOR 150-5010.

STAGING REFUGE AREAS
(APPROX 1 MILE SPACING)
UTILIZE IN STAGES 2 AND 3

TO BE USED AT THE FOLLOWING LOCATIONS:

STA

LEFT	RIGHT
190+50	195+00
250+00	250+00
302+00	298+00
380+00	380+00
426+00	420+00
488+00	488+00
540+00	540+00

NOTE: INTERCHANGE LOCATIONS:
SR 34 STA 142+17
SR 154 STA 340+88
COLLINSWORTH STA 609+67
END PROJECT STA 654+60

GRIND EXISTING CONCRETE PAVEMENT TO PREVENT THE TRAPMENT OF WATER AT THE FOLLOWING LOCATIONS:

SOUTHBOUND:	NORTHBOUND:
166+77 TO 172+77	166+77 TO 172+77
214+10 TO 220+10	214+85 TO 220+85
238+77 TO 244+77	237+93 TO 243+93
306+61 TO 312+61	305+88 TO 311+88
356+39 TO 362+39	355+88 TO 361+88
388+17 TO 394+17	387+57 TO 393+57
428+91 TO 434+91	428+10 TO 434+10
579+30 TO 585+30	579+52 TO 585+52
631+43 TO 637+43	631+60 TO 637+60

STAGING GENERAL NOTES

1. ALL LOCATIONS AT THE LEADING EDGE OF THE TEMPORARY CONCRETE BARRIER WILL EITHER BE PROTECTED BY TEMPORARY IMPACT ATTENUATOR OR MEET THE REQUIREMENTS FOR FLARE RATE (GA STANDARD 4960)

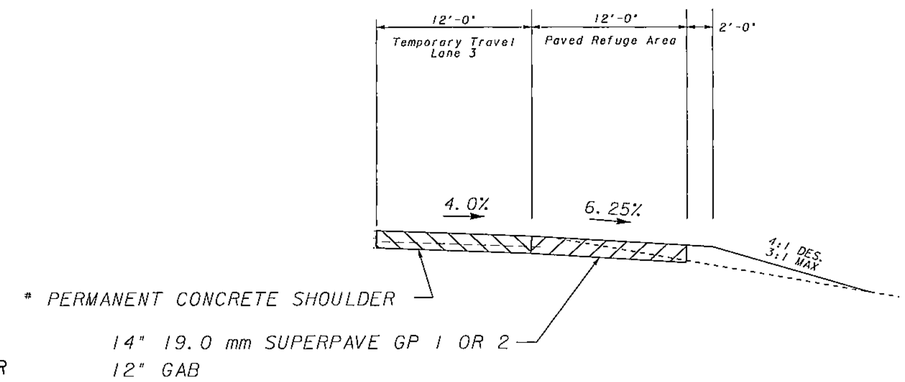

TYPICAL SHOULDER DETAIL FOR REFUGE AREAS

USE ON CONSTRUCTION

MULKEY
ENGINEERS & CONSULTANTS
1255 CANTON STREET, SUITE G
ROSWELL, GEORGIA 30075
(678) 461-3511

REVISION DATES		
03/26/07		
04/06/07		

STATE OF GEORGIA
DEPARTMENT OF TRANSPORTATION
OFFICE:
STAGING DETAILS
REFUGE AREAS

DRAWING No. 19-02