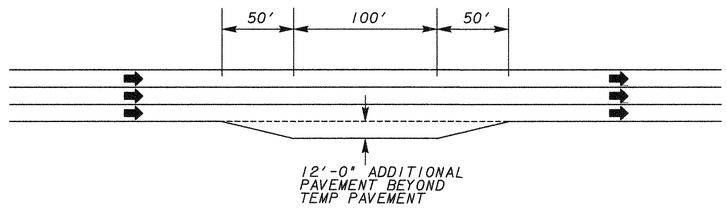

NOTE: USE THE SAME PAVING STRUCTURE DEPTHS AND MATERIALS AS THE TEMPORARY PAVEMENT

STAGING REFUGE AREAS (APPROX 1 MILE SPACING) UTILIZE IN STAGES 2 AND 3

TO BE USED AT THE FOLLOWING LOCATIONS:

STA	LEFT	RIGHT
	190+50	195+00
	250+00	250+00
	302+00	298+00
	380+00	380+00
	426+00	420+00
	488+00	488+00
	540+00	540+00

NOTE: INTERCHANGE LOCATIONS:
SR 34 STA 142+17
SR 154 STA 340+88
COLLINSWORTH STA 609+67
END PROJECT STA 654+60

STAGING GL VOID

1. ALL LOCATIONS AT THE LEADING EDGE OF THE TEMPORARY CONCRETE BARRIER WILL EITHER BE PROTECTED BY TEMPORARY IMPACT ATTENUATOR OR MEET THE REQUIREMENTS FOR FLARE RATE (GA STANDARD 4960)

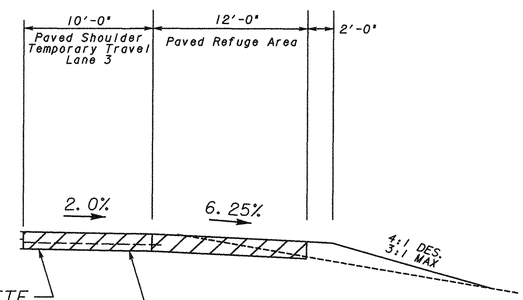

* TEMPORARY ASPHALTIC CONCRETE

2" 12.5 mm SUPERPAVE, GP 1 ONLY,
4" 19.0 mm SUPERPAVE GP 1 OR 2
8" 25.0 mm SUPERPAVE GP 1 OR 2
12" GAB

TYPICAL SHOULDER DETAIL FOR REFUGE AREAS

MULKEY ENGINEERS & CONSULTANTS
1255 CANTON STREET, SUITE G
ROSWELL, GEORGIA 30075
(678) 461-3511

REVISION DATES

STATE OF GEORGIA
DEPARTMENT OF TRANSPORTATION
OFFICE:

STAGING DETAILS
REFUGE AREAS

DRAWING No. 19-02