5/27/2010 9:46:58 AM \\GDOT-DSN1\GOPLOT\QCF\GO_Klp8000.qcf ffLanders M:\M002434\DGN\005-003_002434TYP.prf

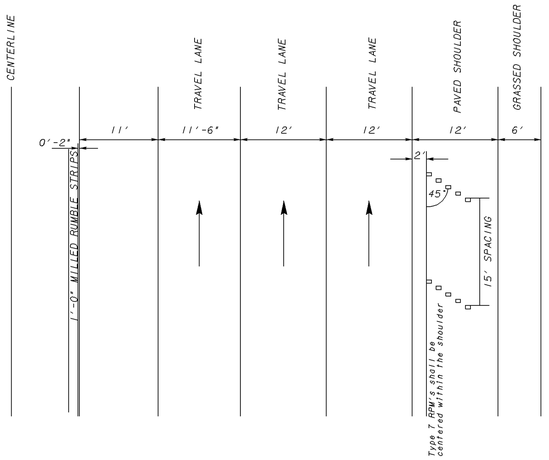

RPM PLACEMENT FOR RUMBLE STRIP ON THE SHOULDERS

RIGHT SIDE SHOWN, LEFT SIDE TO BE MIRRORED

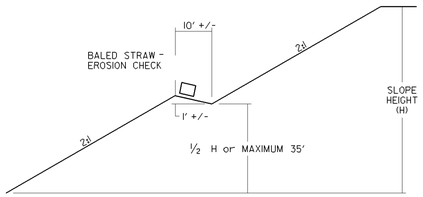

MAXIMUM 2:1 SLOPES WILL BE SAFE FOR THIS PROJECT. HOWEVER, EMBANKMENT AND CUT SLOPES AT THE FOLLOWING LOCATONS WILL REQUIRE CONSTRUCTION OF A BERM IN ACCORDANCE WITH THE DETAIL.

544+00 +/- TO 547+00 +/- LT & RT.

NOTES:

1. FOR SLOPE HEIGHTS LESS THAN 70 FT., BUT GREATER THAN 35 FT., A BERM SHOULD BE CONSTRUCTED AT APPROX. ½ THE SLOPE HEIGHT. FOR SLOPE HEIGHTS GREATER THAN 70 FT., CONSTRUCT A BERM EVERY 35 FT.
2. THE BERM SHOULD BE SLOPED TO DRAIN AND SHOULD BE CONNECTED TO CONCRETE FLUMES TO REMOVE WATER FROM SLOPE.
3. A DRAINAGE DITCH SHOULD BE CONSTRUCTED AT THE TOP OF CUT SLOPES WHERE WATER DRAINS TOWARD SLOPE.

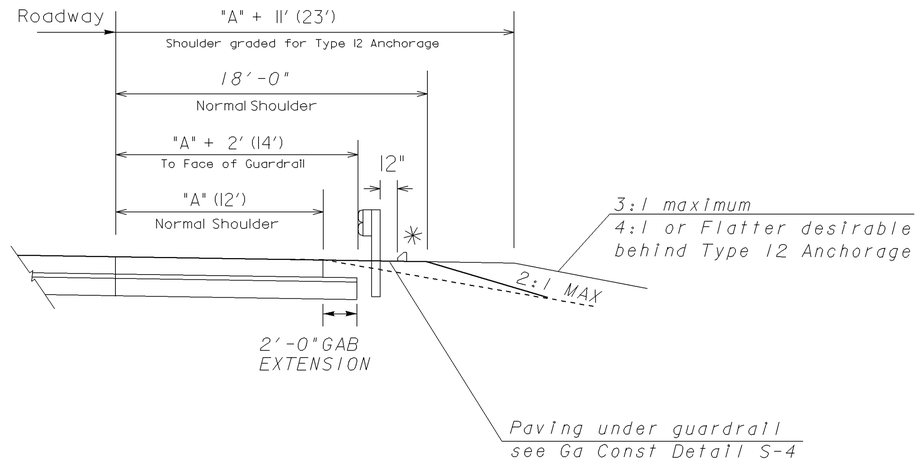

TYPICAL SHOULDER DETAIL FOR GUARDRAIL

SEE PLAN FOR LOCATION

✳ AS PER CONSTRUCTION DETAIL D-26, D-37, & S-4, 6" ASPHALTIC CURB IS TO BE INSTALLED AT THE FOLLOWING LOCATIONS:

LEFT SIDE Drawing No.	RIGHT SIDE Drawing No.
164+00 TO 174+00	162+00 TO 174+00
213+00 TO 216+50	237+00 TO 245+00
252+00 TO 264+50	263+00 TO 267+00
268+50 TO 270+92	281+00 TO 285+00
282+00 TO 285+00	318+00 TO 323+00
319+00 TO 325+00	387+00 TO 394+00
386+00 TO 395+00	454+00 TO 457+00
451+50 TO 455+00	476+00 TO 480+00
476+00 TO 479+00	544+00 TO 548+00
544+00 TO 548+00	578+00 TO 583+00
566+50 TO 570+90	587+00 TO 591+00
578+00 TO 584+00	629+00 TO 635+00
589+00 TO 592+00	
630+00 TO 637+00	

USE ON CONSTRUCTION

MULKEY ENGINEERS & CONSULTANTS
1255 CANTON STREET, SUITE G
ROSWELL, GEORGIA 30075
(678) 461-3511

REVISION DATES
4/06/07
3/25/10
5/25/10

STATE OF GEORGIA
DEPARTMENT OF TRANSPORTATION
OFFICE:
TYPICAL SECTIONS

DRAWING No. 5-03

GPLN

5/27/2010 9:46:58 AM \\GDOT-DSN1\GOPLOT\QCF\GO_Klp8000.qcf ffLanders M:\M002434\DGN\005-003_002434TYP.prf