5/27/2010 9:47:24 AM \\GDOT-DSN1\GOPLOT\QCF\GO_Klp8000.qcf ffLanders M:\M002434\DGN\005-001_002434TYP.prf

COUNTY	PROJECT NUMBER	SHEET NO.	TOTAL SHEETS
COWETA	NHS-M002-00(434)	5	379

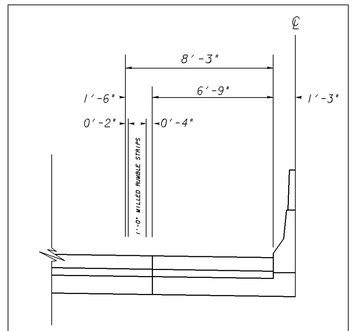

RUMBLE STRIP PLACEMENT
ON INSIDE SHOULDERS

LEFT SIDE SHOWN, RIGHT SIDE TO BE MIRRORED

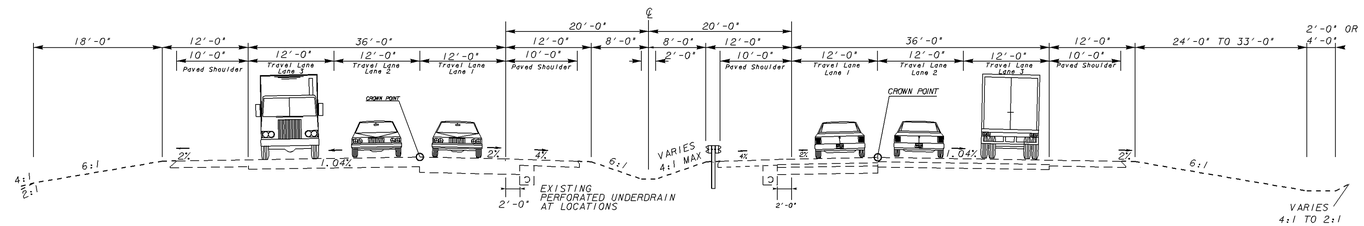

EXISTING
TANGENT SECTION
TS01

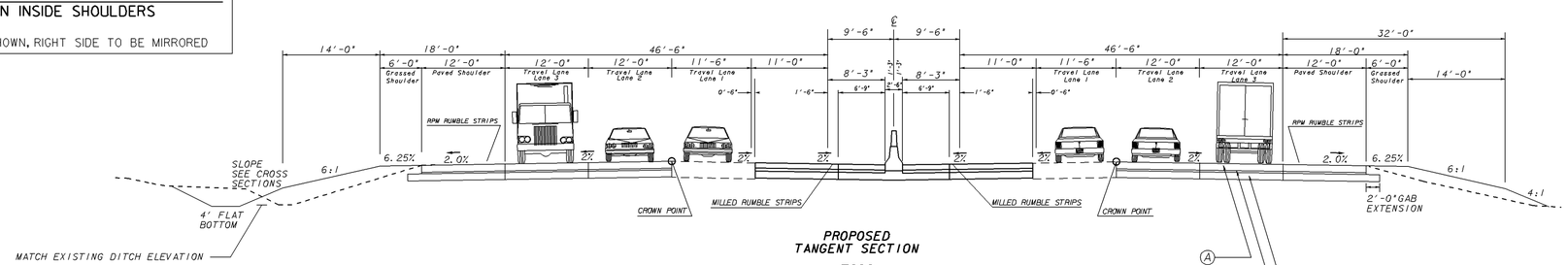

PROPOSED
TANGENT SECTION
TS02

APPLIES TO STA 142+17.73 TO 396+41
STA 458+72 TO 654+60
SEE PLANS FOR SUPERELEVATED SECTION AND TS03

MAINLINE & SHOULDER PAVING

(A) CONT REINF CONC PVMT, CL 1 CONC, 12 INCH THK
(B) RECYCLED ASPH CONC 19MM SUPERPAVE, GP 1 OR 2, INCL BITUM MATL & H LIME, 330 #/SY
(C) 12" GRADED AGGREGATE BASE

USE ON CONSTRUCTION

MULKEY ENGINEERS & CONSULTANTS
1255 CANTON STREET, SUITE G
ROSWELL, GEORGIA 30075
(678) 461-3511

REVISION DATES
3/26/07
3/25/10
5/25/10

STATE OF GEORGIA
DEPARTMENT OF TRANSPORTATION
OFFICE:
TYPICAL SECTIONS

DRAWING No. 5-01

GPLN

5/27/2010 9:47:24 AM \\GDOT-DSN1\GOPLOT\QCF\GO_Klp8000.qcf ffLanders M:\M002434\DGN\005-001_002434TYP.prf