STATE	PROJECT NUMBER	SHEET NO.	TOTAL SHEETS
GA.	SNM-M002-00(418)	48	72

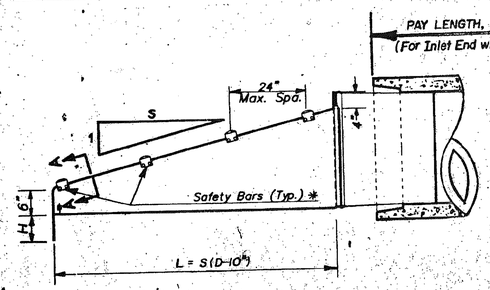

SIDE ELEVATION

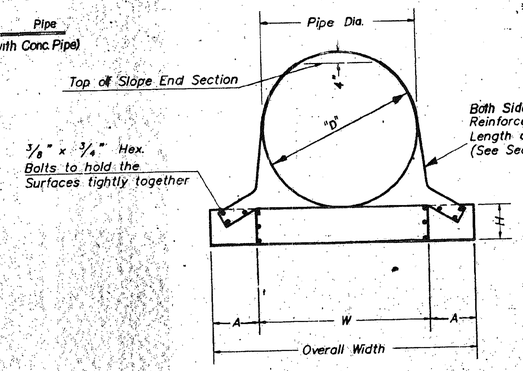

FRONT VIEW

*Number of bars required will vary depending on the length of the End Section. Spacings between centers of bars shall not exceed 24 inches.

Both Sides shall have a Reinforced Edge Full Length of End Section (See Section A-A)

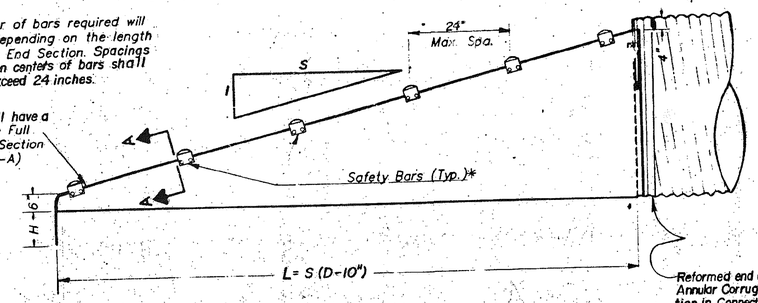

SIDE ELEVATION

GENERAL NOTES

STEEL
Galvanized Steel shall meet A.A.S.H.T.O. Specifications.

CONNECTORS
Payment for End Section shall include Connection of the type required for the Side Drain used.

END SECTION COATINGS
Except where uncoated Galv Steel Pipe is allowed for Side Drain Pipe, the End Sections shall be coated per Ga. D.O.T. Specification, Sec's. 844.05, 844.06, 844.07, or as approved by the D.O.T. Laboratory.

SAFETY BARS shall be Schedule 40 Galvanized Steel Pipe. Pipe to be galvanized after forming. Safety Bars shall be required for all Safety End Sections. Coating of Galvanized Bars is not required.

MISCELLANEOUS DETAILS
Details of Construction Materials and Workmanship not shown on this drawing shall conform to the manufacturer's requirements, subject to approval by the D.O.T's Laboratory. A sample must be submitted to pre-qualify the product.

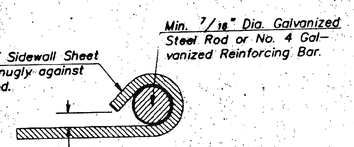

SECTION A-A

NOTE:
Payment for Safety End Section Shall Include Tapered Sleeve.

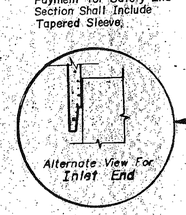

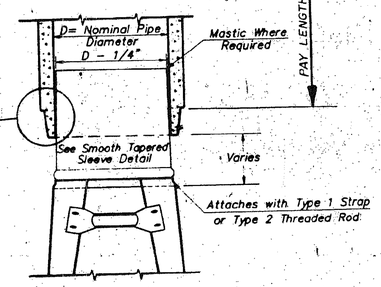

TAPERED SLEEVE FOR ATTACHING STEEL END SECTIONS TO SMOOTH PIPE

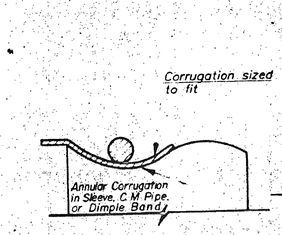

SECTION B-B

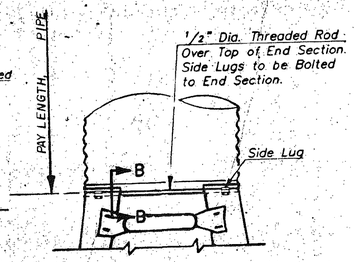

TYPE #2 CONNECTOR DETAILS
For 30" and Larger

TYPE 3 ALTERNATE CONNECTOR (NOT SHOWN)
A Dimple Band Collar may be Shop Bolted to the End Section

SIZES, DIMENSIONS, AND THICKNESSES										
Pipe Dia. (In.)	Min. Thick. In.	Gage	Dimensions (Inches) A	H	W (D+6")	Overall Width	* L Dimensions Slope (S:1)	Length (In.)	Slope (S:1)	Length (In.)
15	.064	16	8	6	21	37	4:1	20	6:1	30
18	.064	16	8	6	24	40	4:1	32	6:1	48
24	.064	16	8	6	30	43	4:1	56	6:1	84
30	.109	12	12	9	36	60	4:1	80	6:1	120
36	.109	12	12	9	42	66	4:1	104	6:1	156
42	.109	12	16	12	48	80	4:1	128	6:1	192
48	.109	12	16	12	54	86	4:1	152	6:1	228

*SEE STD. Nº 9031T FOR SLOPES AT SIDE ROAD OR AT DRIVES

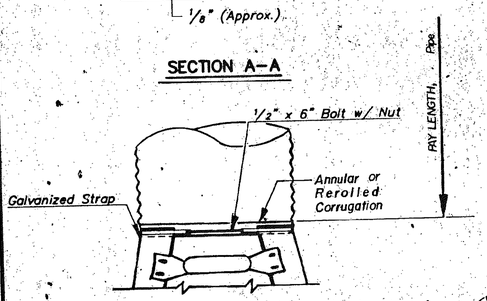

TYPE #1 CONNECTOR DETAIL
Thru 24"

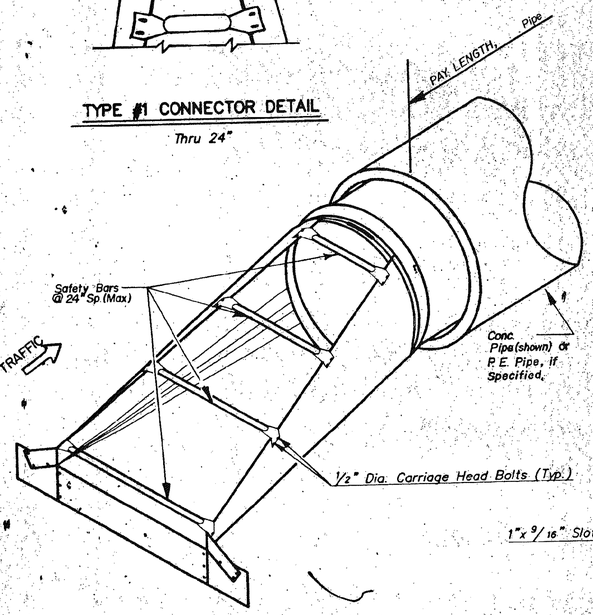

TYPICAL PICTORIAL VIEW
(WITH CONCRETE PIPE)

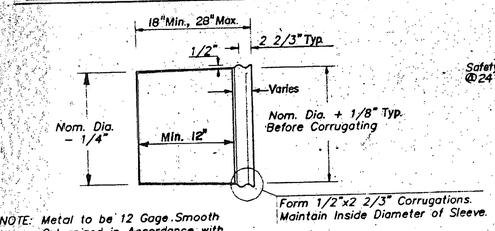

NOTE: Metal to be 12 Gage Smooth Galvanized in Accordance with AASHTO M218 - And Coated as required for End Section.

TYPE 4 CONNECTOR
SMOOTH TAPERED SLEEVE DETAIL

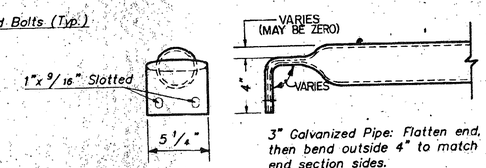

3" Galvanized Pipe: Flatten end, then bend outside 4" to match end section sides.

TYPICAL DETAIL OF SAFETY BARS

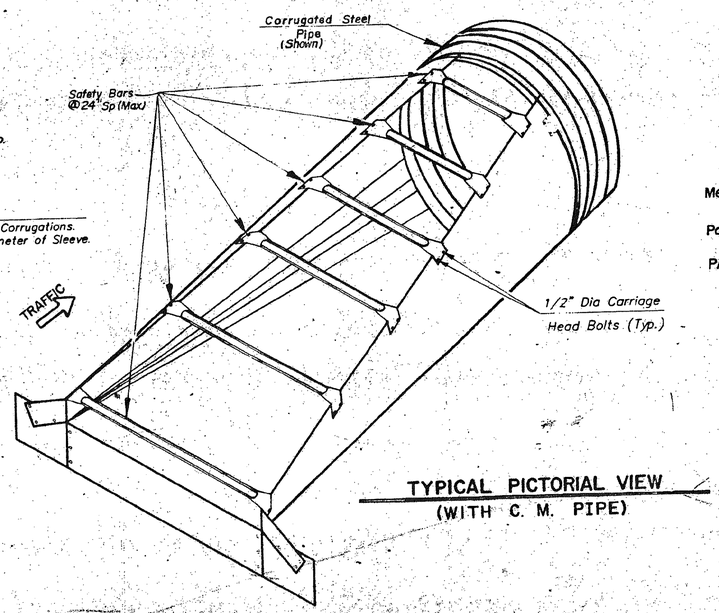

TYPICAL PICTORIAL VIEW
(WITH C. M. PIPE)

SPECIAL NOTE:

WHERE THE LENGTH OF DITCH OR THE DISTANCE BETWEEN TOE POINTS OF END SECTIONS ON SEPARATE INSTALLATIONS WOULD BE LESS THAN 30 FT., CONTINUOUS PIPE WITH AN INTERMEDIATE INLET OR OTHER ALTERNATE MAY BE SPECIFIED INSTEAD.

Measurement: SAFETY END SECTIONS WILL BE MEASURED BY THE UNIT.

Payment: SAFETY END SECTIONS WILL BE PAID FOR AT THE CONTRACT UNIT PRICE FOR EACH SECTION OF THE SPECIFIED SIZE.

PAYMENT WILL BE MADE UNDER:
Item No. 550, SAFETY END SECTION ___IN, ___DRAIN, ___SLOPE

BY	REVISION	DATE
R.M.U.	PAY ITEM REVISION	12-14-94
R.M.U.	GEN. REVISION	11-18-93
R.M.U.	REFER TO STD. 9031-T	10-4-93

DEPARTMENT OF TRANSPORTATION
STATE OF GEORGIA

CONSTRUCTION DETAILS
SAFETY SLOPE END SECTION
(FOR SIDE DRAIN PIPE - OR FOR STORM DRAIN PIPE PARALLEL TO MAINLINE)

NO SCALE
SEPTEMBER, 1993

DES. & REV. ___
REDR. ___
CHK. ___

(SUBMITTED) STATE ROAD & AIRPORT DESIGN ENGR.
(APPROVED) CHIEF ENGINEER

D-30

2/20/2008 1:07:18 PM \\GDOT-DSN1\GDPLOT\QCF\Road Design Tiff-18x12 to Tiff-36x24.qcf wnguyen C:\Documents and Settings\wnguyen\Desktop\M002418\Construction\Plan Sheet\m002418 048.tif GO-RD-Plans-Review