STATE	PROJECT NUMBER	SHEET NO.	TOTAL SHEETS
GA.	SAM-M002-0418	34	78

PIPE CURVED ALIGNMENT USING SECTIONS WITH DROPPED JOINTS

NOTE TO DESIGNER:
A COST COMPARISON ESTIMATE SHALL BE MADE BEFORE PIPE CURVED ALIGNMENT IS SPECIFIED:

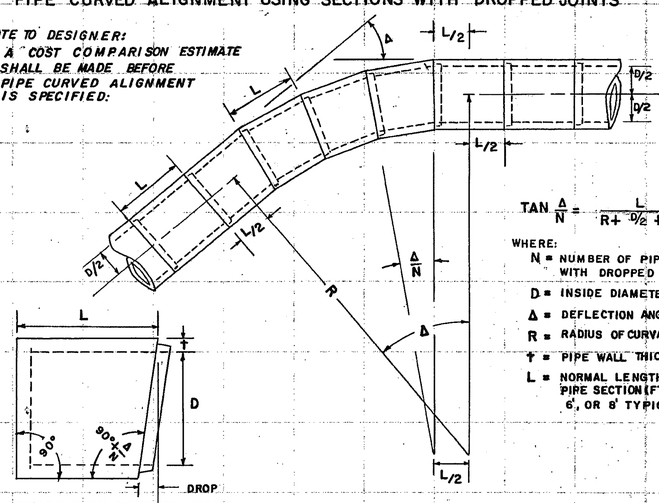

SECTION WITH DROPPED JOINT

$$\tan\frac{\Delta}{N} = \frac{L}{R + D/2 + t}$$

WHERE:
- N = NUMBER OF PIPE SECTIONS WITH DROPPED JOINTS
- D = INSIDE DIAMETER OF PIPE
- Δ = DEFLECTION ANGLE, DEGREES
- R = RADIUS OF CURVATURE (FT.)
- t = PIPE WALL THICKNESS (FT.)
- L = NORMAL LENGTH OF PIPE SECTION (FT.) 4', 6', OR 8' TYPICAL.

NOTES FOR PIPE CURVED ALIGNMENT:
1. PLANS ARE TO SPECIFY ONLY THE PIPE DIAMETER "D", THE ANGLE "Δ", AND THE TANGENT ALIGNMENT.
2. PIPE WALL THICKNESS "t", PIPE SECTION LENGTHS "L", AND DROP IN PIPE JOINT "Δ/N" VARIES ACCORDING TO PIPE PRODUCER AND IS BASED ON FEASIBILITY.
3. THE RADIUS "R" AND THE NUMBER OF DROPPED JOINT PIPE SECTIONS "N" IS DETERMINED BY (1) & (2) ABOVE. MINOR MODIFICATIONS IN THE RADIUS "R" ARE NORMALLY MADE SO THAT "N" WILL BE A WHOLE NUMBER.
4. PIPE SECTIONS SHALL BE ORIENTED SUCH THAT THE PLANE OF THE DROPPED JOINT IS AT RIGHT ANGLES TO THE THEORETICAL CIRCULAR CURVE. THE TOP OF SECTIONS ARE TO BE MARKED SO THAT THE DEFLECTION ANGLE IS PROPERLY ORIENTED.
5. DETAILS ARE SHOWN FOR CONCRETE PIPE. CURVED ALIGNMENT FOR C.M. PIPE SHALL BE AS RECOMMENDED BY THE MANUFACTURER AND APPROVED BY THE ENGINEER.
6. PAYMENT PER LIN. FT. PIPE INCLUDES PIPE SECTIONS WITH DROPPED JOINTS.

DETAILS OF CONCRETE JUNCTION BOX
(PRECAST OR BUILT IN PLACE)

REINFORCED CONCRETE TOP

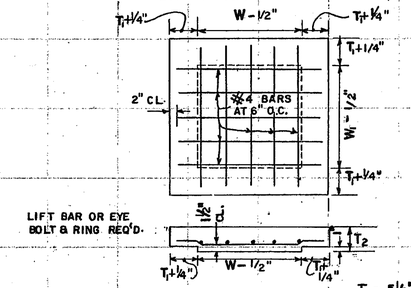

$T_2 = 5\frac{1}{2}"$ FOR W OR W_1 TO 3'-0"
$T_2 = 8"$ FOR W OR W_1 OVER 3'-0"

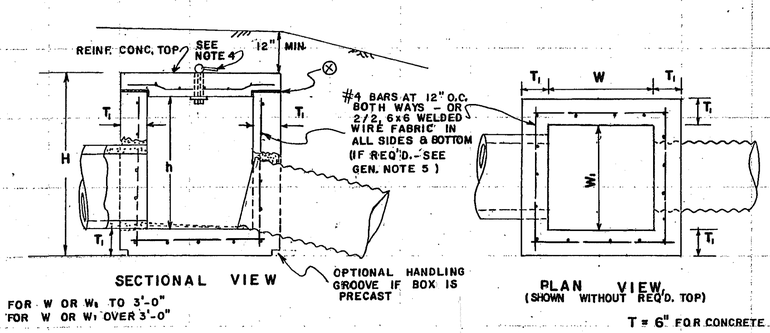

SECTIONAL VIEW

PLAN VIEW
(SHOWN WITHOUT REQ'D. TOP)

T = 6" FOR CONCRETE

DIMENSIONS FOR BRICK OR REINF. CONC. BOX			
PIPE SIZE	MIN. W OR W	MIN. h	MIN. H
15"	2'-0"	1-9"	2'-9"
18"	2'-3"	2'-1"	3'-1"
24"	2'-10"	2'-8"	3'-8"
30"	3'-5"	3'-3"	4'-3"
36"	4'-0"	3'-10"	4'-9"
42"	4'-7"	4'-5"	5'-5"
48"	5'-2"	5'-0"	6'-0"

SEE GEN. NOTE NO.3

DETAILS OF BRICK JUNCTION BOX
FOR BRICK T = 8" (MAX. 10 FT. DEPTH)

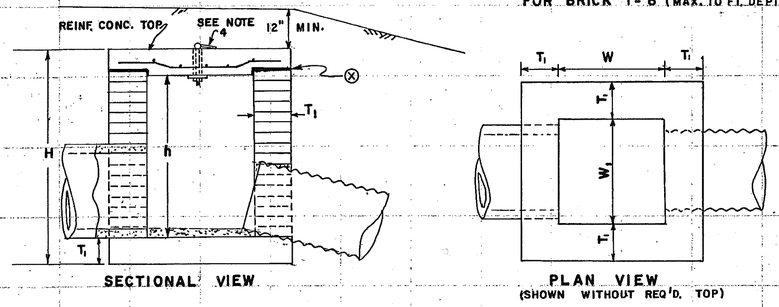

SECTIONAL VIEW

PLAN VIEW
(SHOWN WITHOUT REQ'D. TOP)

⊗ PREVENT BOND WITH EITHER 30 LB. ASPHALT SATURATED FELT OR PREFORMED FOAM JOINT FILLER.

PIPE ELBOW SECTION (PRE-FABRICATED)

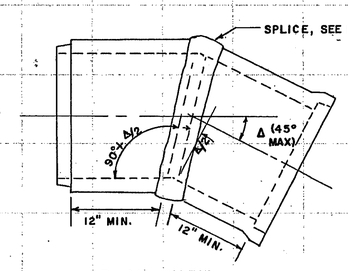

PLAN VIEW

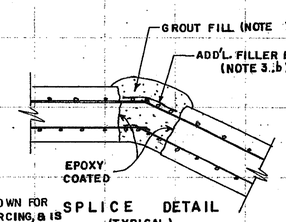

SPLICE DETAIL
(TYPICAL)

NOTE: SPLICE DETAIL IS SHOWN FOR DOUBLE CAGE REINFORCING, & IS SIMILAR FOR SINGLE GAGE REINFORCING, BUT WITH SINGLE SPLICE ALL AROUND BEING APPLICABLE.

NOTES FOR PIPE ELBOW:
1. PAYMENT FOR LIN. FT. OF PIPE INCLUDES ELBOWS.
2. ELBOW ANGLE Δ SHALL VARY ACCORDING TO NEED, BUT SHALL NOT BE GREATER THAN 45°. THE CONTRACTOR SHALL INFORM PRODUCER AS TO ANGLE REQUIRED.
3. (a) CONCRETE PIPE SHALL BE CUT BEFORE BEING CURED AND STEEL EXPOSED FROM EACH SIDE OF CUT.
   (b) EXPOSED STEEL SHALL BE REJOINED. FILLER RODS AT LEAST EQUAL TO RODS IN PIPE SHALL BE ADDED AS NEEDED FOR HANDLING STRENGTH & TO HOLD GROUT.
   (c) ALL VOID IN SPLICE SHALL BE PACKED WITH GROUT MORTAR RICH ENOUGH TO GIVE STRENGTH AT LEAST EQUAL TO REMOVED CONCRETE WITH INSIDE SMOOTHED OUT.
4. C.M. PIPE ELBOW NOT SHOWN, BUT MAY BE SPECIFIED. SOLID WELD SHALL BE REQUIRED FOR C.M. ELBOW JOINT WITH GALVANIZING AND/OR COATINGS REPAIRED AS REQ'D.

BOLT, RING & WASHER DETAILS

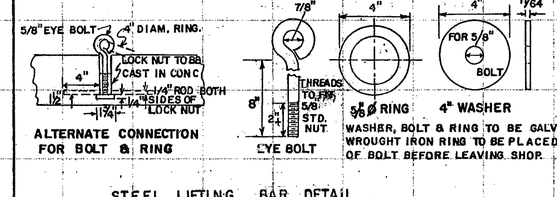

ALTERNATE CONNECTION FOR BOLT & RING

EYE BOLT

5/8 ø RING

4" WASHER

WASHER, BOLT & RING TO BE GALV. STEEL OR WROUGHT IRON RING TO BE PLACED IN EYE OF BOLT BEFORE LEAVING SHOP.

STEEL LIFTING BAR DETAIL

LIFT BAR SHALL BE ABLE TO MOVE UP & DOWN

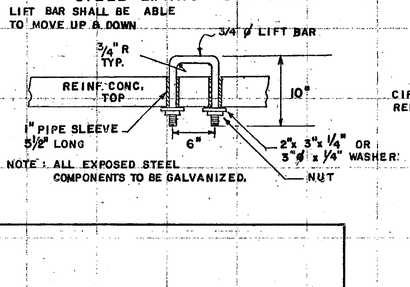

NOTE: ALL EXPOSED STEEL COMPONENTS TO BE GALVANIZED.

DETAILS OF CIRCULAR PRECAST JUNCTION BOX
(REINFORCING AND DESIGN SHALL COMPLY WITH A.S.T.M. C-478 EXCEPT AS OTHERWISE SHOWN. MATERIALS SHALL COMPLY WITH GA. STD. SPECIFICATIONS FOR PRECAST MANHOLES)

I.D.	T_1 (MIN.)	T_2 (MIN.)	MAX. PIPE CONC.	MAX. PIPE C.M.	REBARS IN BOTTOM
4'-0"	5"	6"	30"	36"	#5
5'-0"	5"	6"	42"	48"	#5
6'-0"	6"	8"	48"	54"	#6

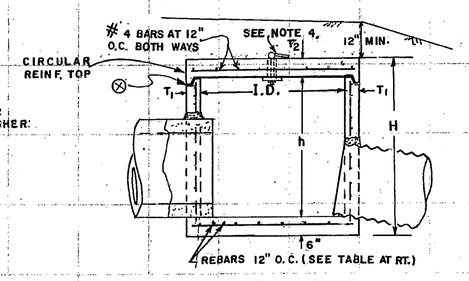

SECTIONAL VIEW

PIPE SIZE	MIN. h	MIN. H
15"	1'-10"	2'-10"
18"	2'-2"	3'-2"
24"	2'-9"	3'-9"
30"	3'-4"	4'-4"
36"	4'-0"	5'-2"
42"	4'-7"	5'-9"
48"	5'-2"	6'-4"

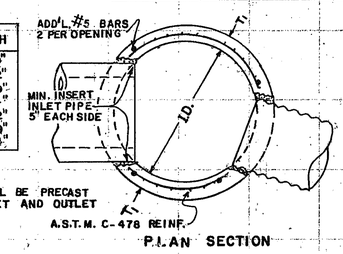

PLAN SECTION

NOTE:
OPENINGS SHALL BE PRECAST FOR BOTH INLET AND OUTLET

CONCRETE COLLAR FOR DEFLECTING PIPE

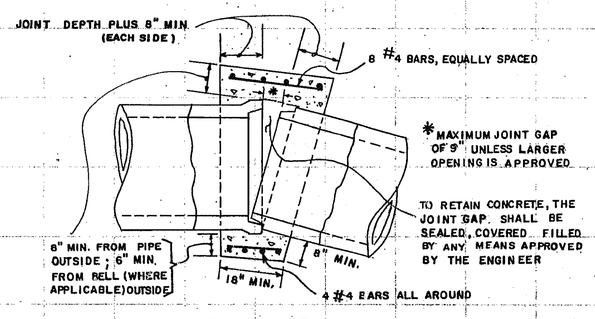

PLAN SECTION

NOTES FOR CONCRETE COLLARS:
1. PERIMETERS OF CONCRETE COLLARS DO NOT HAVE TO BE SMOOTH LINES. COLLARS MAY BE FORMED AGAINST COMPACTED OR UNDISTURED SOIL. DIMENSIONS ARE MINIMUM. COLLAR MAY BE SQUARE, ROUND OR SHAPE MAY VARY SO LONG AS MINIMUM DIMENSIONS ARE OBTAINED.
2. ALL CONCRETE COLLARS ARE TO BE CONSTRUCTED WITH CLASS A CONCRETE.
3. PAYMENT FOR LIN. FT. OF PIPE INCLUDES COLLARS.

CONCRETE COLLAR FOR JOINTING PIPE

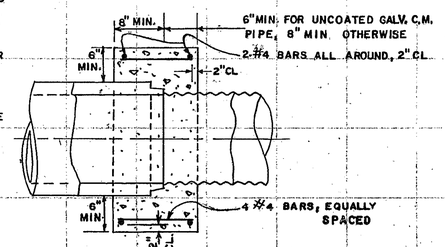

PLAN OR SIDE SECTION

GENERAL NOTES:
1. SPECIFICATIONS: GEORGIA STANDARD, CURRENT EDITION & SUPPLEMENTS THERETO.
2. ILLUSTRATED PIPES, PIPE JOINTS, ALIGNMENT, SIZES, ETC. ARE SHOWN AS REPRESENTATIVE. ACTUAL REQUIREMENTS VARY PER LOCATION AS INDICATED IN THE PLANS.
3. JUNCTION BOXES DO NOT HAVE TO BE CONSTRUCTED SQUARE. W & W_1 DIMENSIONS MAY VARY ACCORDING TO PIPE SIZE.
4. ALL JUNCTION BOX TOPS SHALL BE EQUIPPED WITH EITHER AN EYE BOLT & RING (SHOWN) OR A LIFTING BAR (ALTERNATE).
5. REINFORCING IS REQUIRED FOR ALL PRECAST JUNCTION BOXES. REINFORCING MAY BE OMITTED FOR BUILT IN PLACE CONCRETE BOXES NOT OVER 10 FT. DEEP AND NOT LARGER THAN 3' x 3'. CONSTRUCTION JOINTS PERMITTED IF DOWELED OR KEYED. ALL JUNCTION BOX TOPS SHALL BE REINFORCED.

DEPARTMENT OF TRANSPORTATION
STATE OF GEORGIA

STANDARD

PRECAST OR BUILT IN PLACE
JUNCTION BOXES
PIPE COLLARS, PIPE ELBOW & PIPE CURVED ALIGNMENT

NO SCALE — REV. & REDR. JULY 1985

DES. RMU — (SUBMITTED) Floyd E. Hardy, STATE ROAD & AIRPORT DESIGN ENGR.
DRW. RMU
TRA. GME
CHK. RKC — (APPROVED) Hal Rives, STATE HIGHWAY ENGINEER

NUMBER 9031U

FORM EF6

2/20/2008 1:07:58 PM \\GDOT-DSN1\GOPLOT\GCF\Road_Design_Tiff-18x12_to_Tiff-36x24.gcf wnguyen C:\Documents and Settings\wnguyen\Desktop\M002418\Construction\Plan Sheet\m002418_034.tif GO-RD-Plans-Review