| STATE | PROJECT NUMBER | SHEET NO. | TOTAL SHEETS |
|---|---|---|---|
| GA. | SAM-M002-00 (418) | 24 | 78 |

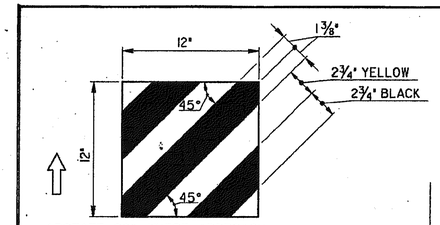


(ROTATE 90° WHERE APPROACH TRAFFIC IS ON RIGHT SIDE)

## NOSE STRIPING DETAIL

BLACK GLOSS ENAMEL INK SCREEN PRINTED ON PRESSURE SENSITIVE ENGINEER GRADE REFLECTIVE SHEETING, TP. I, LEVEL 'A'. (SECTION 913)

*OFFSET NOTE:*
*THE POST OFFSET DIMENSIONS ARE GIVEN TO THE CENTER OF THE TRAFFIC FACE OF THE BLOCKOUTS., EXCEPT AT THE FIRST TWO POSTS, WHERE THE DIMENSION IS TO THE CENTER OF THE TRAFFIC FACE OF THE POST. OFFSET POINTS ARE TO BE LOCATED BY CHORD MEASUREMENTS AT THE BACK OF THE RAIL EQUAL TO THE NOMINAL POST SPACINGS SHOWN. POSTS ARE TO BE SET APPROXIMATELY RADIAL TO THE RAILING AT EACH POST LOCATION.*

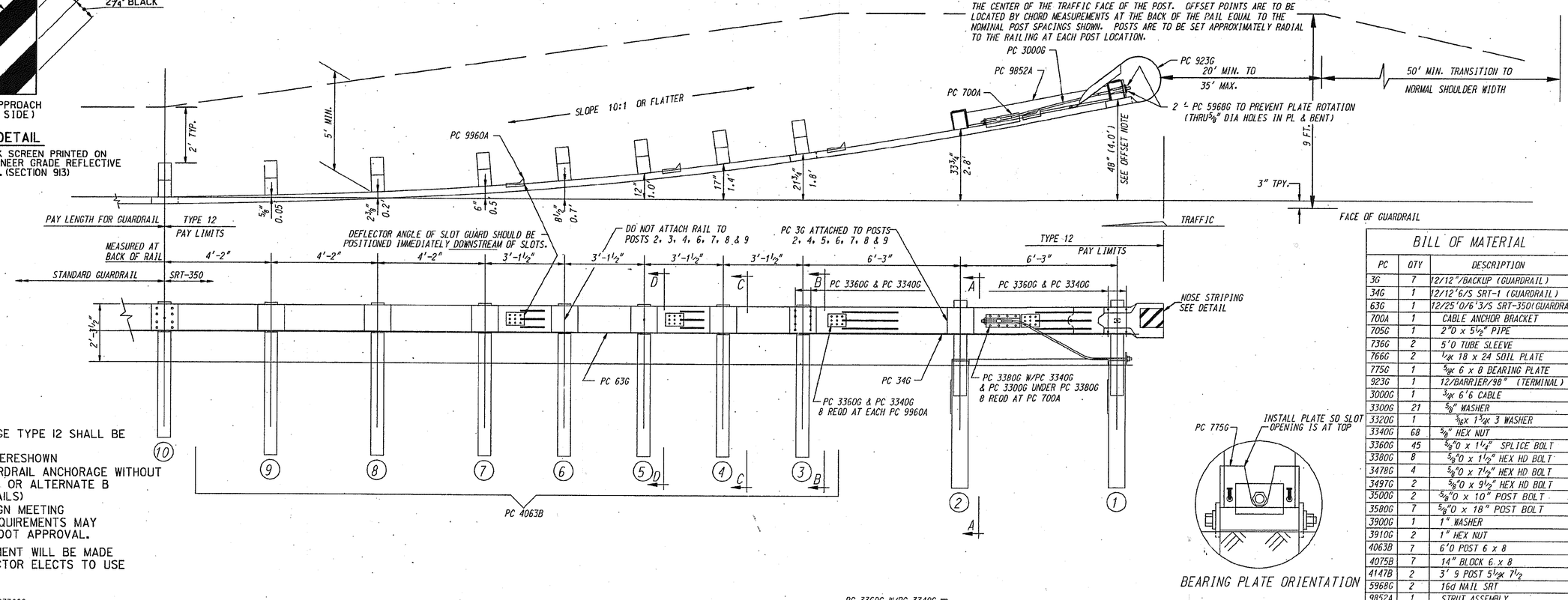


## NOTE:

GUARDRAIL ANCHORAGE TYPE 12 SHALL BE EITHER

(a) SYRO SRT-350 AS HERESHOWN

(b) SPECIAL DESIGN GUARDRAIL ANCHORAGE WITHOUT FLARE, ALTERNATE A OR ALTERNATE B (SEE SEPARATE DETAILS)

(c) AN ALTERNATE DESIGN MEETING NCHRP-350, TL-3 REQUIREMENTS MAY BE SUBMITTED FOR DOT APPROVAL.

NO ADDITIONAL PAYMENT WILL BE MADE WHERE THE CONTRACTOR ELECTS TO USE (b) OR (c).




BEARING PLATE ORIENTATION

## BILL OF MATERIAL

| PC | QTY | DESCRIPTION |
|---|---|---|
| 3G | 7 | 12/12"/BACKUP (GUARDRAIL) |
| 34G | 1 | 12/12'6/S SRT-1 (GUARDRAIL) |
| 63G | 1 | 12/25'0/6'3/S SRT-350(GUARDRAIL) |
| 700A | 1 | CABLE ANCHOR BRACKET |
| 705G | 1 | 2"O x 5 1/2" PIPE |
| 736G | 2 | 5'0 TUBE SLEEVE |
| 766G | 2 | 1/4" x 18 x 24 SOIL PLATE |
| 775G | 1 | 5/8" x 6 x 8 BEARING PLATE |
| 923G | 1 | 12/BARRIER/98" (TERMINAL) |
| 3000G | 1 | 3/4" x 6'6 CABLE |
| 3300G | 21 | 5/8" WASHER |
| 3320G | 1 | 3/16" x 1 3/4" 3 WASHER |
| 3340G | 68 | 5/8" HEX NUT |
| 3360G | 45 | 5/8"O x 1 1/2" SPLICE BOLT |
| 3380G | 8 | 5/8"O x 1 1/2" HEX HD BOLT |
| 3478G | 4 | 5/8"O x 7 1/2" HEX HD BOLT |
| 3497G | 2 | 5/8"O x 9 1/2" HEX HD BOLT |
| 3500G | 2 | 5/8"O x 10" POST BOLT |
| 3580G | 7 | 5/8"O x 18" POST BOLT |
| 3900G | 1 | 1" WASHER |
| 3910G | 2 | 1" HEX NUT |
| 4063B | 7 | 6'0 POST 6 x 8 |
| 4075B | 7 | 14" BLOCK 6 x 8 |
| 4147B | 2 | 3' 9 POST 5 1/2" x 7 1/2 |
| 5968G | 2 | 16d NAIL SRT |
| 9852A | 1 | STRUT ASSEMBLY |
| 9960A | 4 | SLOT GUARD |
| 9961G | 1 | 3/8" x 3 x 4 PLATE WASHER |

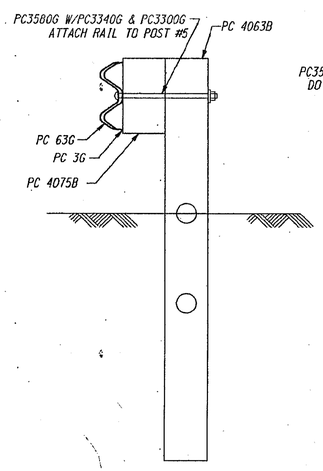


SECTION "D-D"
( @ POST #5)

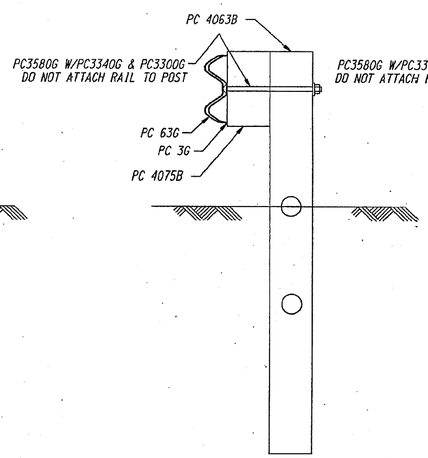


SECTION "C-C"
( @ POSTS #4, #6, #7, #8 & #9)

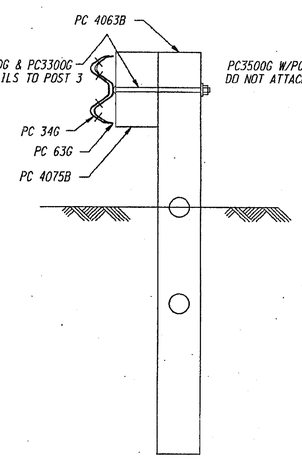


SECTION "B-B"
( @ POST #3)

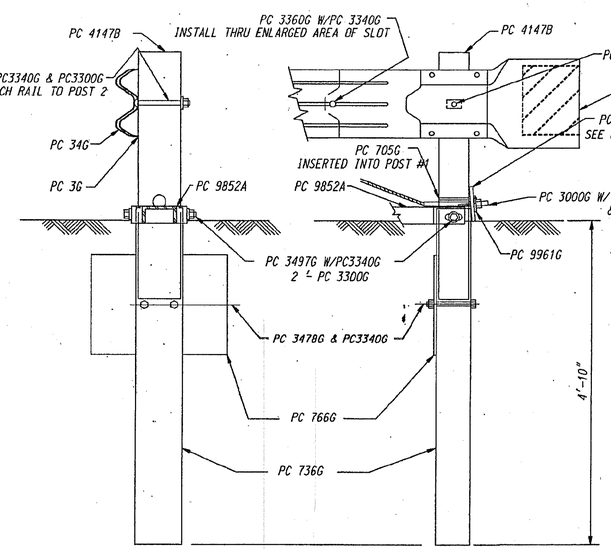


SECTION "A-A"
( @ POST #2)

ENLARGED VIEW @ POST #1

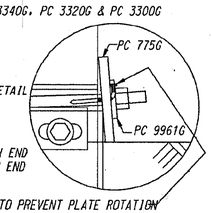


DETAILS NOT SHOWN WILL BE ACCORDING TO THE MANUFACTURERS REQUIREMENTS AND AS APPROVED BY THE ENGINEER. THE CONTRACTOR SHALL OBTAIN A COPY OF THE MANUFACTURERS INSTALLATION INSTRUCTIONS.

| REVISION | BY | DATE |
|---|---|---|
| REVISED NOTES | RMJ | 7-31-97 |

DEPARTMENT OF TRANSPORTATION
STATE OF GEORGIA

STANDARD

GUARDRAIL ANCHORAGE TYPE 12

JULY 1997

DES. ____ DRW. ____ TRA. ____ CHK. ____

(SUBMITTED) STATE ROAD & AIRPORT DESIGN ENGR.

(APPROVED) CHIEF ENGINEER

NUMBER 4040

Tue Nov 25 09:28:28 1997 pi\Jobloc\queue\VAXAPHE.gcf DTRDOJP rev4040.gif

2/20/2008 1:08:29 PM \\GDOT-DSN1\GOPLOT\OCE\Road Design Tiff-18x12 to Tiff-36x24.gcf wnguyen C:\Documents and Settings\wnguyen\Desktop\M002418\Construction\Plan Sheet\m002418_024.tif GO-RD-Plans-Review