STATE	PROJECT NUMBER	SHEET NO.	TOTAL SHEETS
GEORGIA	CSNHS-M002-00 (373)	24	26

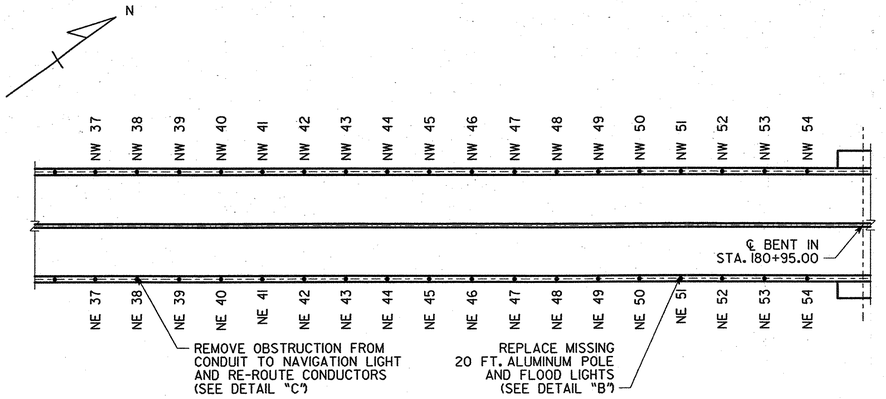

PLAN - TOWER IN

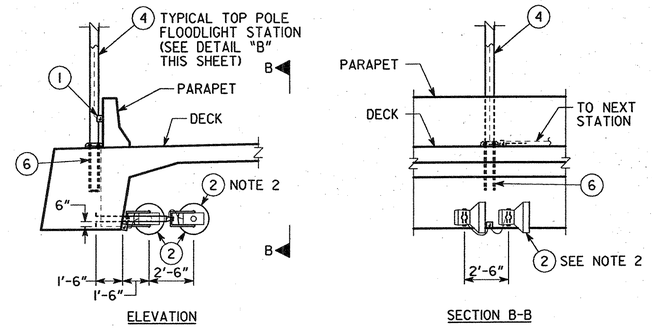

DETAIL "A"
TYPICAL PENDANT MOUNTED
FLOOD LIGHT STATION

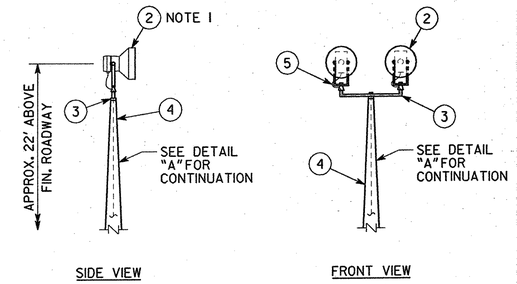

DETAIL "B"
TYPICAL TOP POLE
FLOOD LIGHT STATION

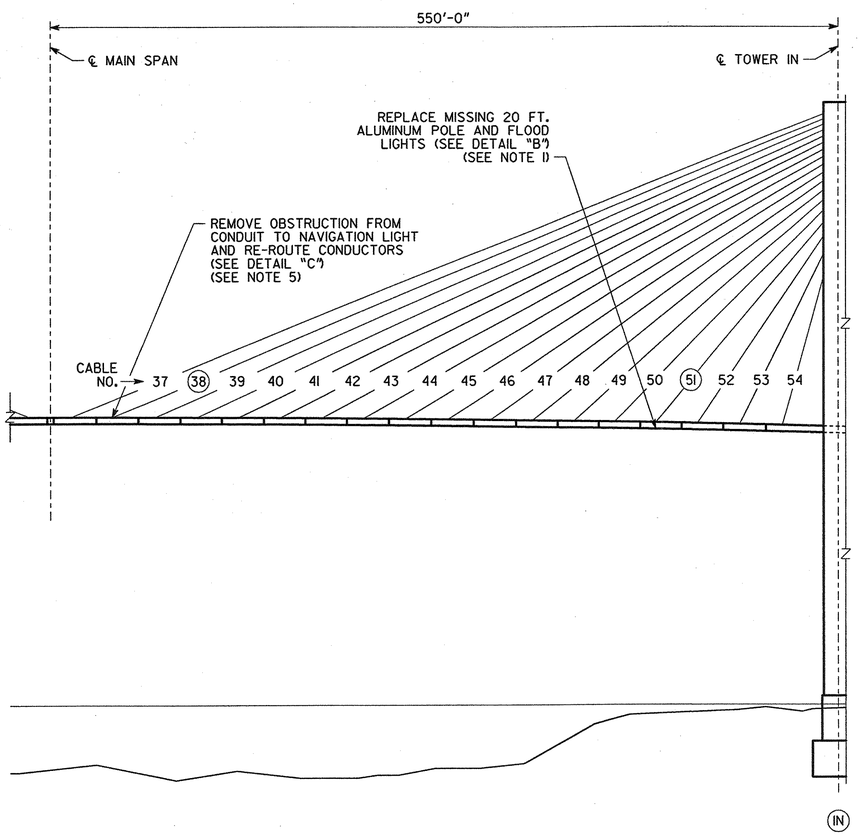

ELEVATION - TOWER IN

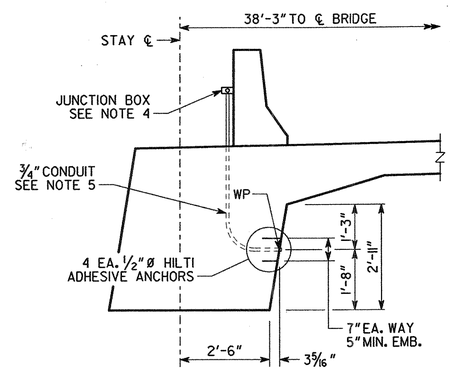

DETAIL "C"
EXISTING NAVIGATION LIGHTING
CONDUIT DETAIL

NOTES

1. REPLACE ALUMINUM POLE, BRACKETS, LAMP FIXTURES, AND LAMPS (SEE ELEVATION DETAIL THIS SHEET).

   CONTRACTOR SHALL REMOVE UNUSED ANCHORS FROM REMOVED LIGHT POLE.

   THE METHOD FOR REMOVAL OF ANCHORS SHALL INVOLVE CUTTING ANCHORS BELOW GRADE AND PATCHING WITH APPROVED MATERIAL.

2. REPLACE UNDER-DECK LAMP FIXTURE AND LAMP (SEE ELEVATION DETAIL THIS SHEET).

   FOR LOCATION SEE SHEET 10.

   CONTRACTOR SHALL VERIFY BEAM SPREAD OF EXISTING FIXTURES AND INDICATE ON SHOP DRAWING SUBMITTAL.

   BEAM SPREAD OF NEW FIXTURE SHALL MATCH EXISTING FIXTURES.

   CONTRACTOR SHALL VERIFY AIMING OF EXISTING FIXTURES. AIMING OF NEW FIXTURE SHALL MATCH EXISTING.

3. TIGHTENING OF POLE ANCHOR BOLTS (FOR LOCATIONS SEE SHEETS 9 & 10).

   CONTRACTOR SHALL TIGHTEN ANCHOR BOLT NUTS ON ALL FLOOD LIGHTING POLES (16 POLES). TORQUE SPECIFICATIONS SHALL BE SUBMITTED FOR REVIEW AND APPROVAL PRIOR TO WORK.

4. REPAIR JUNCTION BOX.

   REPLACE COVER, FASTENERS, AND GASKET AT JUNCTION BOX SERVICING BRIDGE NAVIGATION LIGHT ADJACENT TO CABLE NE 38. COVER AND FASTENERS SHALL BE 300 SERIES STAINLESS STEEL.

5. PROPERLY ROUTE NAVIGATION LIGHT CONDUCTORS.

   REMOVE OBSTRUCTIONS FROM CONDUIT SERVICING THE NAVIGATION LIGHT ADJACENT TO BAY 38 ON THE EAST SIDE OF BRIDGE. INSTALL NEW CONDUCTORS BETWEEN THE JUNCTION BOX AND NAVIGATION LIGHT FIXTURE. CONDUCTORS SHALL BE ROUTED WITHIN THE NAVIGATION LIGHT BRACKET AND FIXTURE.

6. THE CONTRACTOR SHALL MAINTAIN ILLUMINATION OF ALL NAVIGATION AND AVIATION LIGHTING AT ALL TIMES DURING CONSTRUCTION.

EQUIPMENT SCHEDULE

ITEM	DESCRIPTION
1	EXISTING STAINLESS STEEL, PULL OR JUNCTION BOX NEMA 4X
2	NEW TYPE 1000 W, 480 V, METAL HALIDE FLOOD LIGHT. DAY BRITE LGL FAMILY. DISTRIBUTION SHALL MATCH EXISTING.
3	NEW TWIN BULLHORN ALUMINUM BRACKET, TO MATCH OTHER EXISTING BRACKETS. PROVIDE NECESSARY SLIPFITTINGS TO MATCH OTHER EXISTING SLIPFITTINGS.
4	NEW 20' ROUND ALUMINUM POLE, TO MATCH OTHER EXISTING POLES
5	NEW 3C, AWG #12 TYPE SO CORD, 600 VOLT, UV RESISTANT
6	EXISTING ANCHOR BOLTS

Lichtenstein
Consulting Engineers
11 HURON DRIVE, NATICK, MA 01760

GEORGIA
DEPARTMENT OF TRANSPORTATION
OPERATIONS DIVISION-OFFICE OF MAINTENANCE

MISCELLANEOUS ELECTRICAL REPAIRS
TALMADGE MEMORIAL BRIDGE RETROFIT
CHATHAM COUNTY CSNHS-M002-00 (373)

NO SCALE MARCH 2006

BY	REVISIONS	DATE

DESIGNED K.J.B. CHECKED T.S. REVIEWED
DRAWN R.B.H. DESIGN GROUP MAINTENANCE APPROVED

2189ELEC1.DGN