STATE	PROJECT NUMBER	SHEET NO.	TOTAL SHEETS
GEORGIA	CSNHS-M002-00 (373)	22	26

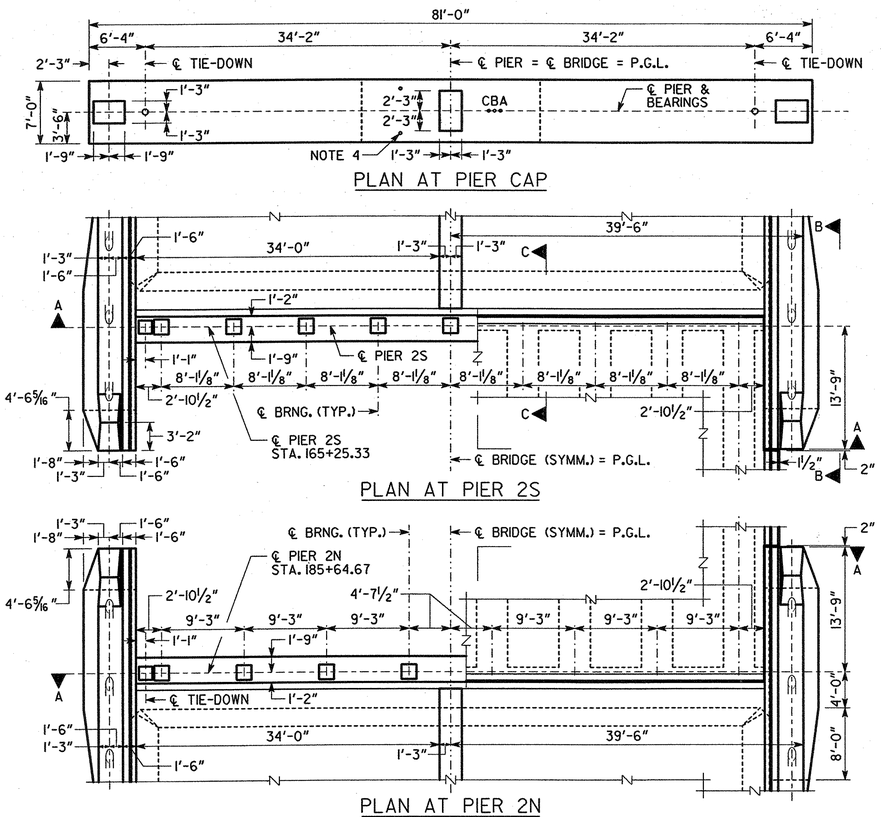

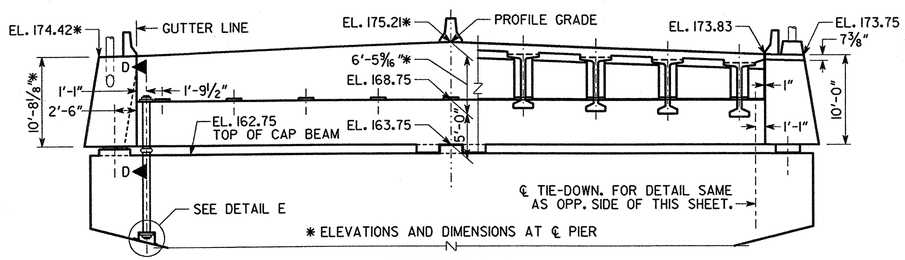

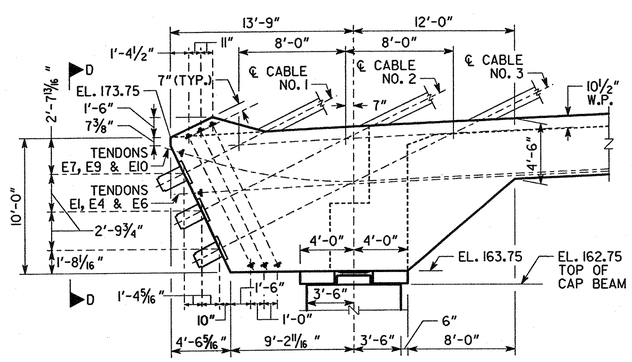

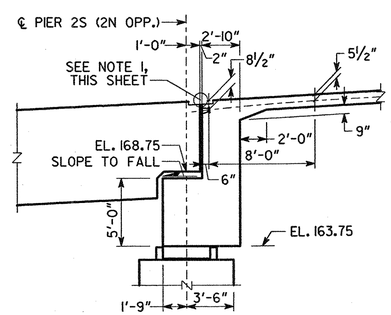

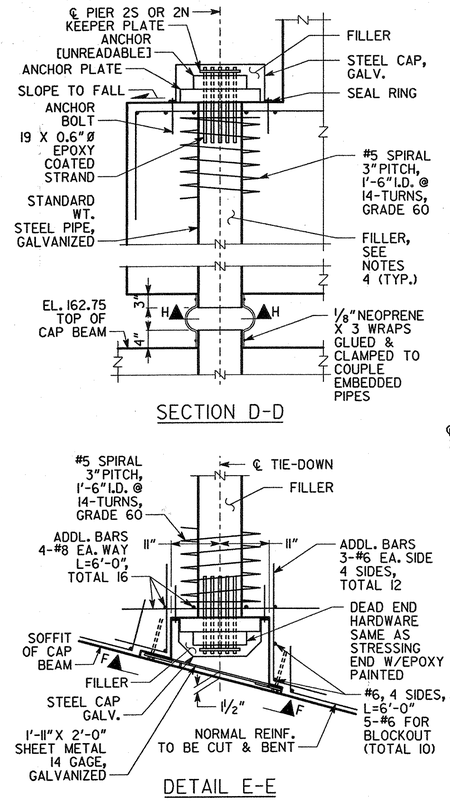

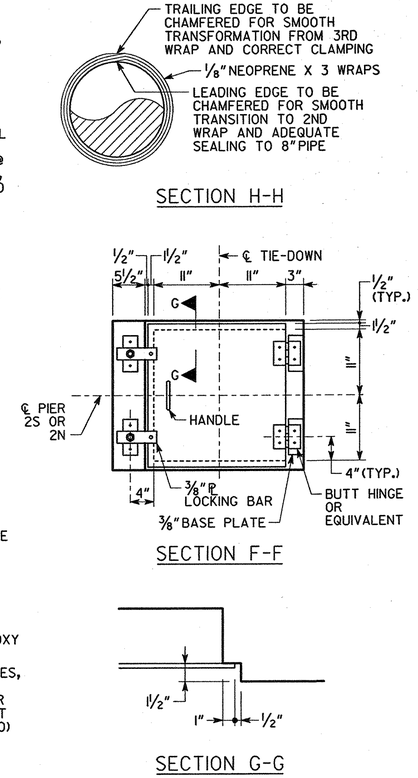

EXISTING TIE-DOWN BOOT DETAIL

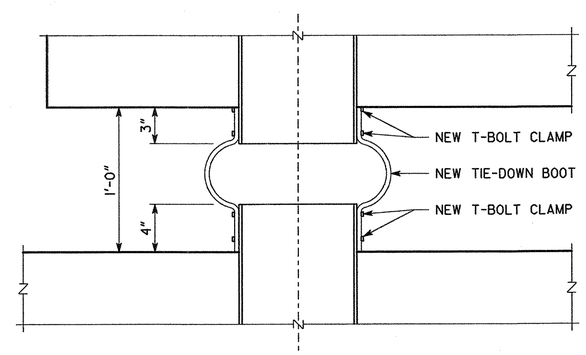

NEW TIE-DOWN BOOT DETAIL

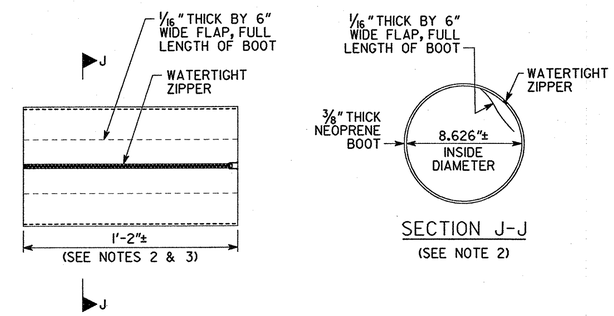

SUGGESTED SEQUENCE
REPAIR ITEM (7) TIE-DOWN BOOT REPAIR

CARE SHALL BE TAKEN NOT TO DAMAGE ANY PART OF THE TIE-DOWN CABLES DURING THIS REPAIR.

1. REMOVE EXISTING STAINLESS STEEL TIE RINGS AND NEOPRENE SHEET.
2. REMOVE EXISTING EXPOSED OR DETERIORATED GREASE FILLER.
3. CLEAN TIE-DOWN CABLES AND PIPE.
4. INSTALL NEW TIE-DOWN BOOT AND CLAMPS.
5. APPLY BEAD OF 100% HIGH GRADE SILICONE SEALANT TO THE EDGE OF THE TIE-DOWN BOOT TO SEAL IT ALONG THE STEEL PIPE.
6. INSTALL GREASE FILLER. CARE SHALL BE TAKEN NOT TO OVER FILL THE TIE-DOWN CONNECTION WITH GREASE FILLER.

NOTES

1. FOR GENERAL NOTES, SEE SHEET NO. 7.
2. EXISTING DIMENSIONS AND DETAILS SHOWN ARE BASED ON 1986 DESIGN PLANS AND ACTUAL DIMENSIONS AND DETAILS MAY BE DIFFERENT. CONTRACTOR SHALL VERIFY THE EXISTING FIELD CONDITIONS AND NEW TIE-DOWN BOOT DIMENSIONS.
3. NEW TIE-DOWN BOOT SHALL BE INSTALLED WITH A SLIGHT BULDGE.
4. GREASE FILLER SHALL BE NO-OX-ID CM CASING FILLER (NUCLEAR GRADE) OR AN APPROVED EQUAL.
5. THE CONTRACTOR SHALL DETERMINE THE AMOUNT OF GREASE FILLER REQUIRED FOR THE TIE-DOWN CONNECTION.

REPAIR LEGEND

REPAIR	DESCRIPTION
1	STEEL ANCHOR PIPE CRACK REPAIR
2	HEAT STRAIGHTENING OF STEEL ANCHOR PIPE
3	REMOVAL OF EXISTING PROTECTIVE BOOTS, STEEL KEEPER RINGS AND WASHERS
4	INSTALLATION OF NEW WASHERS AND STEEL KEEPER RINGS
5	PROTECTIVE BOOT RETROFIT
6	MISCELLANEOUS CONCRETE REPAIRS
7	TIE-DOWN BOOT REPAIR
8	MISCELLANEOUS ELECTRICAL REPAIRS
9	CABLE STAY PROTECTIVE TAPE REPAIR

BRIDGE SHEET 22 OF 26

Lichtenstein
Consulting Engineers
11 HURON DRIVE, NATICK, MA 01760

GEORGIA
DEPARTMENT OF TRANSPORTATION
OPERATIONS DIVISION-OFFICE OF MAINTENANCE

TIE-DOWN BOOT REPAIR
TALMADGE MEMORIAL BRIDGE RETROFIT
CHATHAM COUNTY CSNHS-M002-00 (373)

NO SCALE MARCH 2006

DESIGNED K.J.B. CHECKED T.S. REVIEWED
DRAWN R.B.H. DESIGN GROUP MAINTENANCE APPROVED

REVISIONS DATE BY

2189TIEDOWNBOOT.DGN