STATE	PROJECT NUMBER	SHEET NO.	TOTAL SHEETS
GEORGIA	CSNHS-M002-00 (373)	15	26

TABLE 18 APPROXIMATE PE PIPE LOCATION RELATIVE TO STEEL ANCHOR PIPE (1)

SOUTHWEST PYLON

CABLE	DIM. A	DIM. B	DIM. C	DIM. D	WASHER CONDITION
SW 1	2 5/8	2 5/8	3 5/16	3 9/16	
SW 2	3 11/16	2 13/16	2 13/16	3 3/16	
SW 3	3 5/16	2 9/16	3 1/16	3 3/4	
SW 4	2 3/4	3 3/4	3 1/2	2 3/4	
SW 5	3 1/8	3 3/16	3 3/8	3 1/4	
SW 6	3 1/16	3 3/16	3 5/16	3 1/8	
SW 7	3 13/16	2 15/16	2 1/2	3 1/4	
SW 8	4 7/16	2 3/4	2	3	
SW 9	3 11/16	3 1/16	2 1/2	3 1/8	
SW 10	3 11/16	3 1/16	2 5/8	3 1/8	
SW 11	3 3/4	3 3/8	2 3/16	2 7/8	
SW 12	3 5/8	3 7/16	2 1/2	3 1/8	
SW 13	3 3/8	3 1/2	2 7/8	2 3/4	
SW 14	3 1/2	2 7/8	3	3 1/4	
SW 15	3 3/8	3 3/8	2 15/16	3	
SW 16	3 3/8	3 3/8	3	2 3/4	
SW 17	3 3/8	3 1/4	3	3 1/16	
SW 18	3 3/8	3 5/16	3	3 3/8	DISLODGED
SW 19	3 3/8	3 1/8	3 1/8	3 5/16	
SW 20	3 1/4	3 1/4	3 1/8	3 1/16	
SW 21	3 3/4	3 1/2	2 3/4	3 1/8	
SW 22	3 5/8	2 7/8	2 11/16	3 5/16	
SW 23	3 7/16	3 1/8	3	3 3/16	
SW 24	3 1/8	3 1/16	3 5/8	3 1/2	
SW 25	3 1/2	3 1/16	2 7/8	3 1/4	
SW 26	3	3 1/16	3 1/4	3 7/16	
SW 27	2 7/8	2 3/4	3 5/8	3 3/4	DISLODGED
SW 28	2 1/2	3	3 5/8	3 5/8	
SW 29	3 1/16	3 1/8	3 7/16	3 3/8	
SW 30	3	3	3 1/2	3 9/16	
SW 31	3 3/16	2 1/2	3 1/4	3 3/4	
SW 32	2 1/16	2 11/16	3 7/8	3 3/4	
SW 33	3 5/16	2 7/8	3	3 1/2	DISLODGED
SW 34	3 3/8	3 1/8	3 1/16	3 3/16	
SW 35	3 3/8	3 3/8	3 1/16	3 1/16	
SW 36	3 1/2	3 3/16	3	3 1/8	

NORTHWEST PYLON

CABLE	DIM. A	DIM. B	DIM. C	DIM. D	WASHER CONDITION
NW 37	3 7/8	2 15/16	2 3/8	3 5/8	
NW 38	3 11/16	3	2 3/4	3 1/16	
NW 39	3 1/2	2 15/16	N/A	3 5/16	
NW 40	3 1/2	3 1/4	2 3/4	3	
NW 41	3 1/2	N/A	3	3	
NW 42	3 3/4	3	2 1/2	3 1/8	
NW 43	3 5/16	2 1/2	3 1/16	3 9/16	
NW 44	2 3/16	3 3/8	4 1/8	3 1/16	
NW 45	4 1/16	3 5/8	2 3/8	2 3/4	
NW 46	4 1/8	3 3/16	2 5/16	3 1/4	
NW 47	3 1/2	2 7/8	3	3 9/16	
NW 48	3 11/16	3 3/16	2 9/16	3 1/8	
NW 49	3 5/8	3 1/4	2 15/16	3 1/4	
NW 50	3 5/8	3 1/4	2 3/4	3 1/16	
NW 51	3 3/8	3	3	3 1/4	
NW 52	3 1/2	3 1/16	2 15/16	3 1/4	
NW 53	3 5/16	3 1/4	3	3 1/8	
NW 54	3 1/8	3 1/4	3 1/16	3 1/16	
NW 55	3	3 1/4	3 1/4	3 1/8	
NW 56	2 15/16	3	3 1/4	3 3/8	
NW 57	3 7/16	3 1/8	2 7/8	3 1/8	
NW 58	3 3/8	3 5/16	3 1/8	3 1/16	
NW 59	3 7/8	3 5/8	2 15/16	3 1/16	
NW 60	3 7/16	3 7/16	3	2 15/16	
NW 61	3 1/8	3 3/8	3 1/8	3	
NW 62	3 5/16	3 5/16	3 1/8	3	
NW 63	3 1/4	3 1/8	3 1/8	3 3/8	
NW 64	3 1/16	3 3/16	3 3/8	3 1/16	
NW 65	2 7/8	3 1/4	3 1/2	3 3/8	
NW 66	3 1/16	3 5/8	3 1/4	3	
NW 67	N/A	3 9/16	3 3/8	3 1/8	
NW 68	2 3/4	3 7/16	3 7/8	3 1/8	
NW 69	2 7/8	3 1/4	3 11/16	3 1/4	
NW 70	3 1/8	2 9/16	3	3 1/4	
NW 71	3 3/8	3	2 7/8	2 7/8	
NW 72	2 7/8	2 3/4	3 3/16	3 3/8	

SOUTHEAST PYLON

CABLE	DIM. A	DIM. B	DIM. C	DIM. D	WASHER CONDITION
SE 1	2 1/2	3	3 1/2	3	
SE 2	3 7/16	2 5/8	2 3/4	3 1/4	
SE 3	3 7/8	2 5/8	2 3/16	3 1/8	
SE 4	3 9/16	2 7/8	2 7/8	3 9/16	
SE 5	3 3/8	3 1/8	3	3 1/2	
SE 6	3 1/16	2 3/4	3 1/4	3 3/8	
SE 7	2 13/16	3 1/4	3 3/8	2 15/16	
SE 8	4	3 1/2	2 1/4	2 1/2	
SE 9	3 5/8	3 1/8	2 3/4	3 1/4	DISLODGED
SE 10	3 1/8	2 13/16	3 7/16	3 1/4	
SE 11	3 1/2	3	2 15/16	3 3/16	
SE 12	3 5/16	2 9/16	2 7/8	2 9/16	
SE 13	3 11/16	3	2 5/8	3 1/4	
SE 14	3 3/8	3 5/16	2 11/16	3 1/4	
SE 15	3 1/8	3 1/16	3 3/8	3 1/4	
SE 16	3 3/4	3 1/4	2 3/4	3 1/4	
SE 17	3 1/8	3 1/16	3 1/4	3 1/4	
SE 18	3 1/2	3 1/4	2 7/8	3 1/4	
SE 19	3 3/8	3 1/2	3 1/8	3	
SE 20	3 3/8	3	3	3 1/2	
SE 21	3 1/2	3 3/8	2 7/8	2 7/8	
SE 22	3 7/8	2 7/8	3	3 1/4	
SE 23	3 9/16	3 1/16	2 3/4	3	
SE 24	3 1/2	3 1/4	2 3/4	2 15/16	
SE 25	3 13/16	3 1/16	2 1/2	3	
SE 26	3 7/16	3 1/16	3	3 5/16	
SE 27	3 1/2	3	3 1/8	3 3/4	
SE 28	3 3/8	2 15/16	3 3/16	3 1/2	
SE 29	2 15/16	3 1/8	3 3/8	3 7/16	
SE 30	2 3/4	3 1/2	3 3/4	3 3/16	
SE 31	3 1/16	2 3/4	3 5/16	3 3/4	
SE 32	3 1/4	2 3/8	3 3/8	4 1/16	
SE 33	3 1/16	3 1/8	3 5/8	3 3/8	
SE 34	3 7/16	3 1/8	3	3 1/16	DISLODGED
SE 35	3 1/8	2 7/8	3 3/16	3 5/8	
SE 36	3 1/4	2 15/16	3 1/4	3 7/16	DISLODGED

NORTHEAST PYLON

CABLE	DIM. A	DIM. B	DIM. C	DIM. D	WASHER CONDITION
NE 37	3 1/2	3 5/8	3	2 7/8	
NE 38	3 3/4	3 7/8	2 7/8	2 3/4	
NE 39	3 5/16	3 9/16	2 7/8	2 7/8	
NE 40	3 1/4	3 1/2	3 1/8	2 15/16	
NE 41	3 9/16	3 1/4	2 3/4	3	
NE 42	3 1/2	3 1/4	2 3/4	3 1/16	
NE 43	3 1/8	3	3 1/4	3 3/8	
NE 44	3 1/2	2 5/8	3	3 5/8	DISLODGED
NE 45	3 7/8	3 7/16	2 7/16	2 7/8	
NE 46	3 1/8	2 7/8	3 1/2	3 7/8	
NE 47	3 7/8	3	2 5/8	3 13/16	DISLODGED
NE 48	3 11/16	2 5/8	2 7/8	3 9/16	
NE 49	3 1/2	2 7/8	2 15/16	3 5/16	
NE 50	3 3/4	3	2 11/16	3 1/8	
NE 51	3 3/4	3	2 7/8	3 5/16	DISLODGED
NE 52	3 3/8	3 1/4	3	3 1/8	
NE 53	3 1/2	3 1/8	3 5/8	3 1/16	
NE 54	3 5/16	3 1/2	3 5/16	3	
NE 55	3	3 1/2	3 3/8	3 1/4	
NE 56	3 1/8	3 1/16	3 5/16	3 5/16	
NE 57	3 1/2	3 3/16	3	3 1/16	
NE 58	3 1/8	3 3/16	3 3/16	3 1/16	
NE 59	3 11/16	2 3/4	2 11/16	3 9/16	
NE 60	3 13/16	3 1/4	2 3/8	3 1/16	
NE 61	3 1/2	3 1/16	2 3/4	3 1/8	
NE 62	3 9/16	3 5/16	2 13/16	3	
NE 63	3 1/2	3	3	3 5/16	
NE 64	3 1/2	2 7/8	3	3 9/16	
NE 65	3	2 3/4	3 1/2	2 1/2	
NE 66	2 11/16	3	3 5/8	3 5/8	
NE 67	3 3/16	2 15/16	3 1/4	3 3/16	
NE 68	3 1/2	2 7/8	2 15/16	3 1/2	
NE 69	3 1/16	3	2 7/8	2 7/8	
NE 70	3 1/4	2 11/16	2 7/8	3 1/4	
NE 71	3 3/4	3 3/16	2 3/4	3 1/16	
NE 72	3 3/4	3	2 3/4	3	

(1) THE MEASUREMENTS AND WASHER CONDITIONS ARE AS PER THE 2001 FIELD INSPECTION, AND THE CURRENT MEASUREMENTS AND WASHER CONDITIONS MAY BE DIFFERENT THAN AS SHOWN ON THIS TABLE.

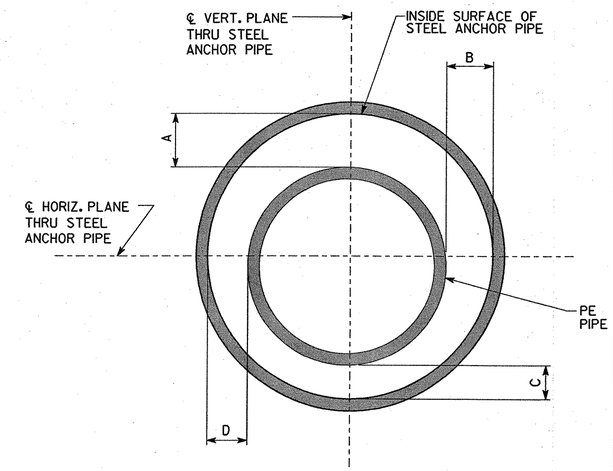

CROSS SECTION AT END OF STEEL ANCHOR PIPE
(SHOWN WITHOUT STEEL KEEPER RING OR WASHER)

NOTES

1. THE APPROXIMATE DIMENSIONS PROVIDED IN TABLE 18 ARE FOR REFERENCE ONLY. THESE DIMENSIONS SHALL NOT BE USED FOR FABRICATION OF WASHERS. ALL DIMENSIONS MUST BE FIELD MEASURED BY THE CONTRACTOR FOR FABRICATION OF WASHERS. SEE GENERAL NOTES ON SHEET NO. 10.
2. THE DIMENSIONS IN TABLE 18 WERE TAKEN AT THE END OF THE STEEL ANCHOR PIPE WITH A TOLERANCE OF ±1/8" AND DO NOT GIVE THE DIMENSIONS FOR WASHERS.
3. SINCE THE DIMENSIONS VARY ALONG THE CABLE STAY, THE CONTRACTOR SHOULD NOTE THAT THE MEASUREMENTS FOR FABRICATION OF WASHERS SHOULD BE TAKEN AT 1 1/8 INCH (FOR THE EXPOSED FACE OF WASHER) AND 7 1/8 INCHES (FOR THE HIDDEN FACE OF WASHER) FROM THE END OF THE STEEL ANCHOR PIPE.
4. N/A - DIMENSIONS NOT AVAILABLE.

REPAIR LEGEND

REPAIR	DESCRIPTION
1	STEEL ANCHOR PIPE CRACK REPAIR
2	HEAT STRAIGHTENING OF STEEL ANCHOR PIPE
3	REMOVAL OF EXISTING PROTECTIVE BOOTS, STEEL KEEPER RINGS AND WASHERS
4	INSTALLATION OF NEW WASHERS AND STEEL KEEPER RINGS
5	PROTECTIVE BOOT RETROFIT
6	MISCELLANEOUS CONCRETE REPAIRS
7	TIE-DOWN BOOT REPAIR
8	MISCELLANEOUS ELECTRICAL REPAIRS
9	CABLE STAY PROTECTIVE TAPE REPAIR

BRIDGE SHEET 15 OF 26

Lichtenstein
Consulting Engineers
11 HURON DRIVE, NATICK, MA 01760

GEORGIA
DEPARTMENT OF TRANSPORTATION
OPERATIONS DIVISION-OFFICE OF MAINTENANCE

REVISIONS | DATE | BY

KEEPER RING & WASHER RETROFIT 5 OF 5
TALMADGE MEMORIAL BRIDGE RETROFIT
CHATHAM COUNTY CSNHS-M002-00 (373)

NO SCALE | MARCH 2006

DESIGNED K.J.B. | CHECKED T.S. | REVIEWED
DRAWN R.B.H. | DESIGN GROUP MAINTENANCE | APPROVED

2189-KRW6.DGN