STATE	PROJECT NUMBER	SHEET NO.	TOTAL SHEETS
GEORGIA	CSNHS-M002-00 (373)	14	26

TABLE 17 APPROXIMATE PE PIPE LOCATION RELATIVE TO STEEL ANCHOR PIPE [1]

SOUTHWEST DECK

CABLE	DIM. A	DIM. B	DIM. C	DIM. D	WASHER CONDITION
SW 1 [2]	1 1/2	1	3/4	1 1/8	MISSING
SW 2 [2]	1 7/8	1 3/8	1/2	1	MISSING
SW 3	1 3/8	1 1/8	15/16	1 1/8	
SW 4	1 1/2	1 1/4	1 1/8	1 1/4	MISSING
SW 5	1 3/8	1 1/4	1 1/16	1 1/8	DISLODGED
SW 6 [2]	1	1	1 5/16	7/8	
SW 7 [2]	1 7/8	1 1/2	5/8	1	MISSING
SW 8 [2]	1 7/16	1 1/8	7/8	1	
SW 9 [2]	1 5/8	1 1/2	3/4	15/16	MISSING
SW 10 [2]	1 7/16	1 3/8	7/8	1	MISSING
SW 11	1 1/4	1 3/8	1	1	
SW 12	1 3/16	1 3/8	1 1/4	1	
SW 13	1 1/4	1 1/4	1 3/16	1 1/16	
SW 14	1 1/8	1 3/8	1 3/8	1	
SW 15	1 1/4	1 5/16	1 3/16	1 1/16	
SW 16	1 1/4	1 1/4	1 1/16	1 3/16	
SW 17	1 1/8	1 3/8	1 3/16	15/16	
SW 18	1 1/8	1 1/4	1 1/8	1 1/4	
SW 19 [2]	7/8	1	1 7/16	1 3/16	
SW 20	1 1/8	1 1/8	1 1/4	1 3/8	
SW 21	1 1/4	1 1/16	1 1/8	1 3/8	
SW 22	1 1/8	1	1 3/8	1 1/4	
SW 23	1 1/16	15/16	1 1/4	1 3/8	
SW 24	1 3/16	1	1 1/4	1 3/8	
SW 25	1 5/16	15/16	1 1/8	1 3/8	
SW 26	1 1/8	1 3/16	1 3/16	1 3/8	
SW 27	1 1/4	1 1/4	1 1/4	1 1/4	
SW 28	1 1/4	1 1/8	1 1/8	1 3/8	
SW 29	1 3/8	1 1/4	1 3/8	1 1/4	
SW 30	1 3/8	1 1/16	1 1/16	1 1/16	
SW 31	1 1/4	1 1/8	1	1 1/8	
SW 32	1 3/8	1 1/16	1 1/8	1 1/8	
SW 33	1 1/8	1 1/16	1 1/4	1 1/4	
SW 34	1 5/8	1 3/16	15/16	1 1/4	MISSING
SW 35	1 5/8	1	1	1 3/16	
SW 36	1 5/16	1 1/16	1 1/4	1 5/16	DISLODGED

NORTHWEST DECK

CABLE	DIM. A	DIM. B	DIM. C	DIM. D	WASHER CONDITION
NW 37 [2]	1 5/8	1 3/16	7/8	1 1/4	MISSING
NW 38 [2]	2 1/4	1 15/16	3/4	7/16	MISSING
NW 39 [2]	2 7/16	1 1/2	3/16	1/2	MISSING
NW 40	1	1 1/8	1 3/8	1	
NW 41	1 1/4	1 3/16	15/16	1 3/16	DISLODGED
NW 42 [2]	1 5/8	1 3/8	3/4	3/4	MISSING
NW 43 [2]	1 7/16	1 3/8	5/8	3/4	MISSING
NW 44 [2]	1 1/8	1 1/4	1 1/4	7/8	
NW 45	1 1/8	1 1/4	1 3/8	1	
NW 46	1 1/4	1 5/16	1 5/16	1	
NW 47	1	1 1/2	1 5/16	1	
NW 48	1 1/16	1 1/4	1 5/16	1 1/8	
NW 49	1	1 7/16	1 3/8	1	
NW 50	1 7/16	1	1 3/16	1 5/16	
NW 51	1 3/16	1 3/16	1 5/16	1 3/16	
NW 52	1	1 3/8	1 3/8	1	
NW 53	15/16	1 3/8	1 3/8	1 1/16	
NW 54	1 1/8	1 1/16	1 5/16	1 1/4	
NW 55	1 3/16	1 1/16	1 1/8	1 3/16	
NW 56	1 1/8	1 1/8	1 1/4	1 1/8	
NW 57	1 3/16	1 1/16	1 1/8	1 5/16	
NW 58	1 1/16	1	1 1/4	1 1/4	
NW 59	1 3/16	1	1 1/4	1 3/8	
NW 60	1 3/16	1	1 1/8	1 5/16	
NW 61	1 1/32	1 1/16	1 5/16	1 5/8	
NW 62	1 1/4	1	1 1/8	1 1/4	
NW 63	1 1/4	1 1/8	1 1/8	1 1/4	
NW 64	1 3/8	1	1 1/16	1 1/4	
NW 65	1 1/8	1	1 5/16	1 1/4	
NW 66	1 1/4	1 1/16	1 1/16	1 5/16	
NW 67	1 3/8	1	1	1 1/8	
NW 68	1 1/2	1 1/8	1	1 1/8	
NW 69	1 1/2	1 3/16	1 1/8	1 3/16	
NW 70 [2]	1 9/16	1 1/16	5/8	1	
NW 71 [2]	1 1/2	1	7/8	1 1/16	
NW 72 [2]	1 5/16	1 3/16	7/8	1 1/16	

SOUTHEAST DECK

CABLE	DIM. A	DIM. B	DIM. C	DIM. D	WASHER CONDITION
SE 1 [2]	5/8	1 1/16	1 1/2	N/A	MISSING
SE 2	1	1 3/16	1 5/16	1 3/16	
SE 3	1 1/8	1 1/16	1 1/4	15/16	
SE 4	1 1/8	1 3/16	1 3/8	1 3/16	
SE 5 [2]	1 1/8	1 3/8	1 1/2	7/8	MISSING
SE 6	1 5/16	1 1/8	1	1	
SE 7	15/16	1 7/16	1 1/2	15/16	MISSING
SE 8	1 1/16	1 1/4	1 1/4	1	
SE 9	1 1/16	1 7/16	1 1/8	1	DISLODGED
SE 10	1	1 1/8	1 5/16	1 1/16	
SE 11 [2]	1 1/8	1 7/16	1 1/8	13/16	DISLODGED
SE 12	1 5/16	1 3/16	1 1/4	15/16	
SE 13	1 1/4	1 5/16	1 1/16	15/16	
SE 14	1 1/4	1 5/16	1 1/16	1 1/16	
SE 15	1 3/8	1 1/4	15/16	1 1/16	
SE 16	1	1 5/16	1 5/16	1	
SE 17	1 3/8	1 1/4	1	1 1/16	
SE 18	1 3/16	1 1/16	1 1/8	1 5/16	
SE 19	15/16	1 5/16	1 7/16	1 1/16	
SE 20	1	1 3/8	1 1/4	1	
SE 21	1 9/16	1 1/4	1 1/8	1 1/8	
SE 22	1 1/4	1 3/8	1 1/4	1	
SE 23	1 1/8	1 5/16	1 3/8	1 1/16	
SE 24	1 3/16	1 3/16	1 1/4	1 1/16	
SE 25	1 3/16	1 3/16	1 1/16	1 1/16	
SE 26	1 1/8	1 1/4	1 3/16	1	
SE 27	1 1/4	1 5/16	1 1/8	1	
SE 28	1 3/8	1 3/8	1	1 1/16	
SE 29	1 5/16	1 3/16	15/16	15/16	
SE 30 [2]	1 1/4	1 1/8	7/8	1	
SE 31	1 1/4	1 1/4	1	1 1/16	
SE 32	1 5/16	1 1/8	1	1	
SE 33	1 3/16	1 1/4	1 1/8	1 1/8	
SE 34 [2]	2 3/8	1 3/8	0	1 1/8	MISSING
SE 35 [2]	1 3/4	1 1/8	7/8	1 1/4	MISSING
SE 36	1	1 1/2	1 1/4	1 1/16	

NORTHEAST DECK

CABLE	DIM. A	DIM. B	DIM. C	DIM. D	WASHER CONDITION
NE 37	1 9/16	1 1/8	1 1/16	1 1/4	
NE 38 [2]	1 1/4	3/4	1 3/16	1 1/2	MISSING
NE 39 [2]	2 1/8	1	3/4	1 5/8	MISSING
NE 40	1 1/8	15/16	1 5/16	1 1/4	
NE 41 [2]	1 1/2	7/8	3/4	1 5/16	MISSING
NE 42	1 1/8	1 1/16	1 1/8	1 1/8	
NE 43 [2]	1 5/8	7/8	5/8	1 5/16	MISSING
NE 44 [2]	1 3/16	7/8	1 5/16	1 3/16	
NE 45	1	1 1/8	1 1/8	1 3/8	
NE 46	1 3/16	1 1/8	1 1/8	1 1/4	
NE 47	1 3/16	N/A	1 1/4	1 5/16	DISLODGED
NE 48	1 1/8	1	1 1/8	1 3/8	
NE 49	1 3/16	1	1 1/4	1 1/4	
NE 50	1 3/16	1 1/16	1 1/16	1 1/4	
NE 51 [2]	1 1/8	7/8	1 5/16	1 7/16	
NE 52	1 3/16	1 1/16	1 1/4	1 5/8	
NE 53	1 3/8	1 1/4	1	1	
NE 54	1 5/16	1 1/16	15/16	1 1/8	
NE 55	1 1/16	1 3/16	1 1/16	1 1/16	
NE 56	1	1 5/16	1 3/16	1 1/16	
NE 57	1 1/4	1 9/16	1 1/8	15/16	
NE 58	1 1/16	1 1/4	1 3/16	1	
NE 59	1	1 1/8	1 1/4	15/16	
NE 60	1 5/16	1 1/4	1	1 1/8	
NE 61	1	1 3/16	1 5/16	1	
NE 62	1 1/8	1 3/8	15/16	15/16	DISLODGED
NE 63 [2]	1 1/2	1 1/2	7/8	15/16	DISLODGED
NE 64 [2]	1 5/16	1 1/4	7/8	1 1/16	DISLODGED
NE 65 [2]	15/16	1 3/8	1 3/16	7/8	
NE 66 [2]	1 5/16	1 1/8	1 1/16	3/4	
NE 67 [2]	1 5/16	1 3/16	7/8	15/16	
NE 68	1 1/2	1 1/8	1 1/16	1	
NE 69	1 1/4	1 3/16	1 1/16	1	
NE 70	N/A	N/A	N/A	N/A	
NE 71 [2]	2	13/16	7/16	1 1/4	MISSING
NE 72 [2]	2 1/4	N/A	0	15/16	DISLODGED

[1] THE MEASUREMENTS AND WASHER CONDITIONS ARE AS PER THE 2001 FIELD INSPECTION, AND THE CURRENT MEASUREMENTS AND WASHER CONDITIONS MAY BE DIFFERENT THAN AS SHOWN ON THIS TABLE.

[2] REPAIR ② LOCATION (SEE NOTES).

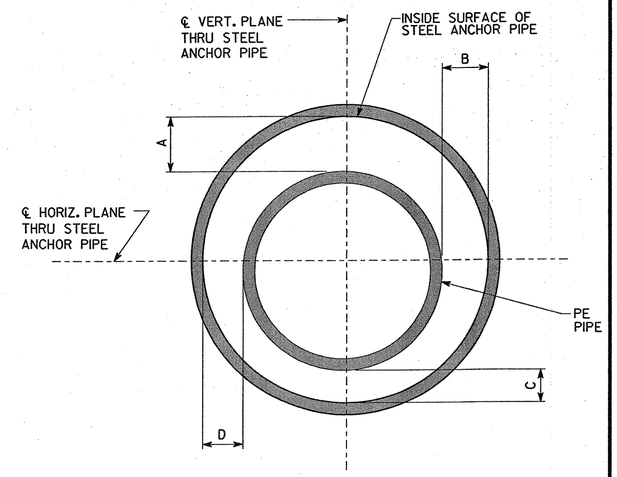

CROSS SECTION AT END OF STEEL ANCHOR PIPE

(SHOWN WITHOUT STEEL KEEPER RING OR WASHER)

NOTES

1. THE APPROXIMATE DIMENSIONS PROVIDED IN TABLE 17 ARE FOR REFERENCE ONLY. THESE DIMENSIONS SHALL NOT BE USED FOR FABRICATION OF WASHERS. ALL DIMENSIONS MUST BE FIELD MEASURED BY THE CONTRACTOR FOR FABRICATION OF WASHERS. SEE GENERAL NOTES ON SHEET NO. 10.
2. THE DIMENSIONS IN TABLE 17 WERE TAKEN AT THE END OF THE STEEL ANCHOR PIPE WITH A TOLERANCE OF ±1/8" AND DO NOT GIVE THE DIMENSIONS FOR WASHERS.
3. SINCE THE DIMENSIONS VARY ALONG THE CABLE STAY, THE CONTRACTOR SHOULD NOTE THAT THE MEASUREMENTS FOR FABRICATION OF WASHERS SHOULD BE TAKEN AT 1 1/2 INCH (FOR THE EXPOSED FACE OF WASHER) AND 7 1/2 INCHES (FOR THE HIDDEN FACE OF WASHER) FROM THE END OF THE STEEL ANCHOR PIPE.
4. N/A - DIMENSIONS NOT AVAILABLE.
5. AT REPAIR ② LOCATIONS THE WASHER MEASUREMENTS SHALL BE TAKEN AFTER COMPLETION OF REPAIR ②.

REPAIR LEGEND

REPAIR	DESCRIPTION
①	STEEL ANCHOR PIPE CRACK REPAIR
②	HEAT STRAIGHTENING OF STEEL ANCHOR PIPE
③	REMOVAL OF EXISTING PROTECTIVE BOOTS, STEEL KEEPER RINGS AND WASHERS
④	INSTALLATION OF NEW WASHERS AND STEEL KEEPER RINGS
⑤	PROTECTIVE BOOT RETROFIT
⑥	MISCELLANEOUS CONCRETE REPAIRS
⑦	TIE-DOWN BOOT REPAIR
⑧	MISCELLANEOUS ELECTRICAL REPAIRS
⑨	CABLE STAY PROTECTIVE TAPE REPAIR

BRIDGE SHEET 14 OF 26

Lichtenstein
Consulting Engineers
11 HURON DRIVE, NATICK, MA 01760

REVISIONS	BY	DATE

GEORGIA
DEPARTMENT OF TRANSPORTATION
OPERATIONS DIVISION-OFFICE OF MAINTENANCE

KEEPER RING & WASHER RETROFIT 4 OF 5
TALMADGE MEMORIAL BRIDGE RETROFIT
CHATHAM COUNTY CSNHS-M002-00 (373)

NO SCALE MARCH 2006

DESIGNED K.J.B. CHECKED T.S. REVIEWED
DRAWN R.B.H. DESIGN GROUP MAINTENANCE APPROVED

2189-KRW5.DGN