STATE	PROJECT NUMBER	SHEET NO.	TOTAL SHEETS
GEORGIA	CSNHS-M002-00 (373)	5	26

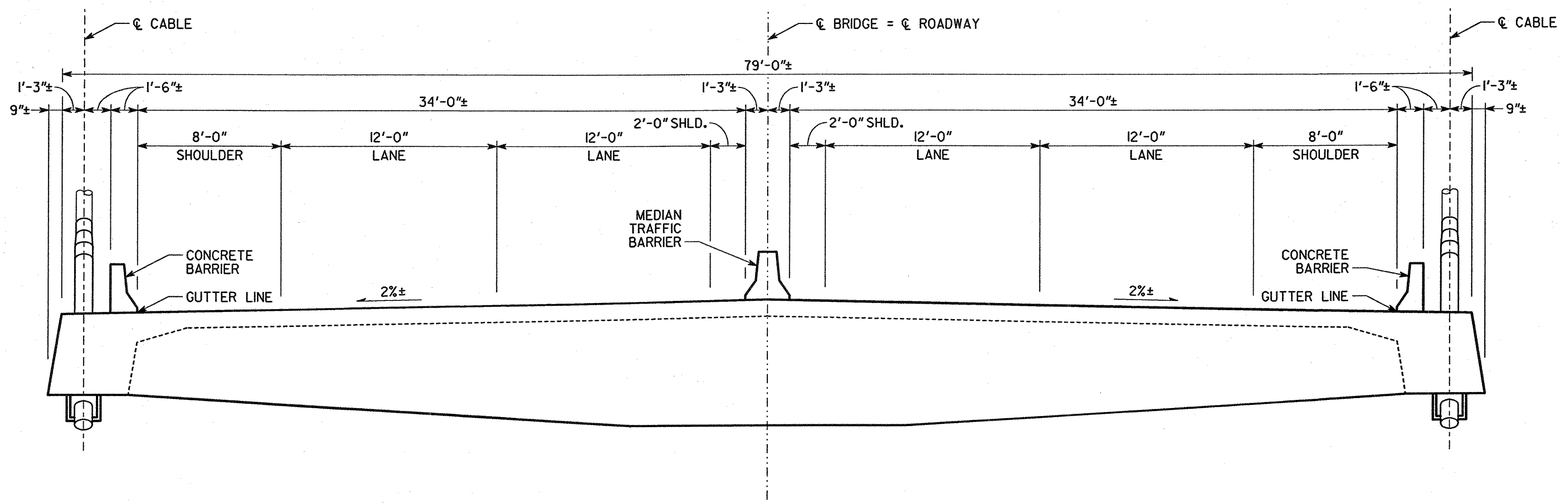

TYPICAL EXISTING BRIDGE SECTION

NOTES

1. FOR GENERAL NOTES SEE SHEET 7.

Lichtenstein
Consulting Engineers
11 HURON DRIVE, NATICK, MA 01760

GEORGIA
DEPARTMENT OF TRANSPORTATION
OPERATIONS DIVISION-OFFICE OF MAINTENANCE

TYPICAL EXISTING BRIDGE SECTION
TALMADGE MEMORIAL BRIDGE RETROFIT
CHATHAM COUNTY CSNHS-M002-00 (373)

NO SCALE MARCH 2006

BY	REVISIONS	DATE

DESIGNED K.J.B. CHECKED P.G.N. REVIEWED
DRAWN R.B.H. DESIGN GROUP MAINTENANCE APPROVED

BRIDGE SHEET 5 OF 26

2189SECT.DGN

231\bridge\2189sect.dgn 03/28/2006 11:08:44 AM