STATE	PROJECT NUMBER	SHEET NO.	TOTAL SHEETS
GA.	NHS-M002-00 (136) CT 2	18	24

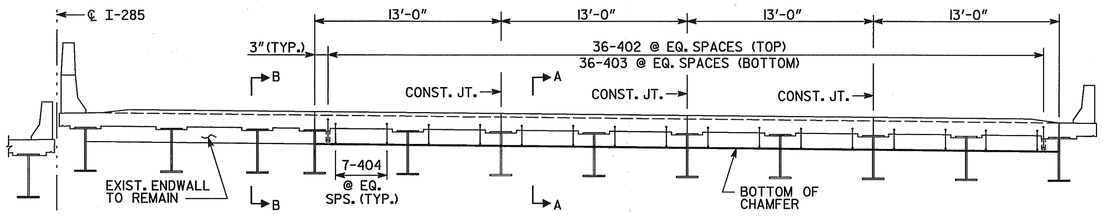

SECTION THRU ENDWALL - SPAN 1

(LOOKING BACK)

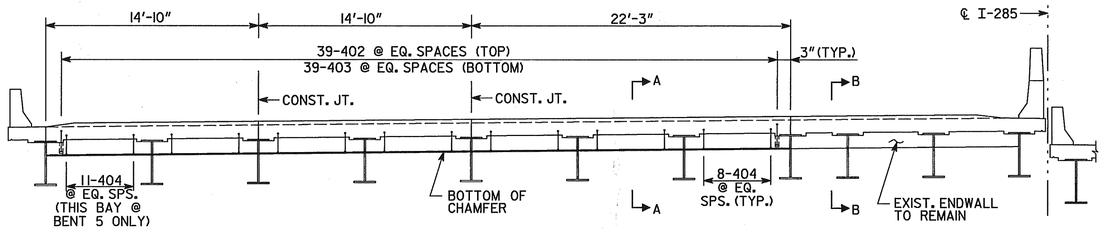

SECTION AT EDGE BEAM - SPANS 2, 3, AND 4

(LOOKING AHEAD)

NOTE: COST FOR SUPPLYING AND INSTALLING SLEEVE AND BOLT TO BE INCLUDED IN PRICE BID FOR REINFORCING STEEL.

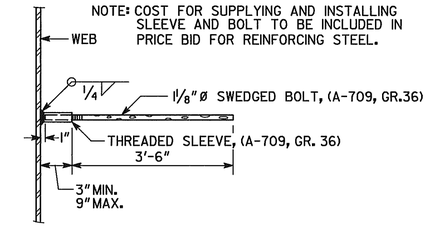

EDGE BEAM BAR LAP DETAIL

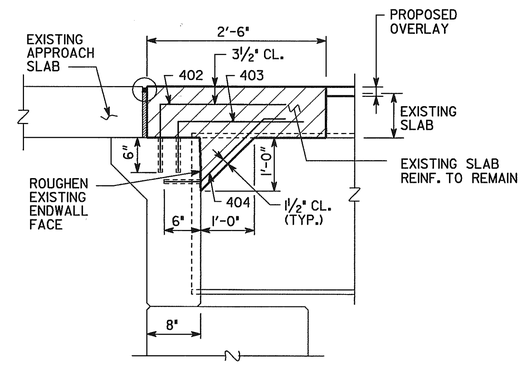

SLAB REINFORCEMENT NOT SHOWN.

SECTION A-A

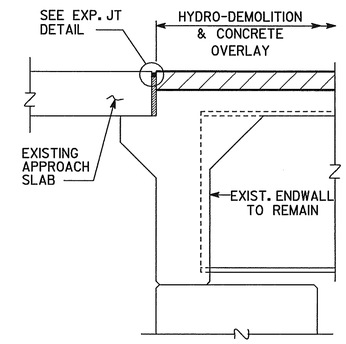

SLAB REINFORCEMENT NOT SHOWN.

SECTION B-B

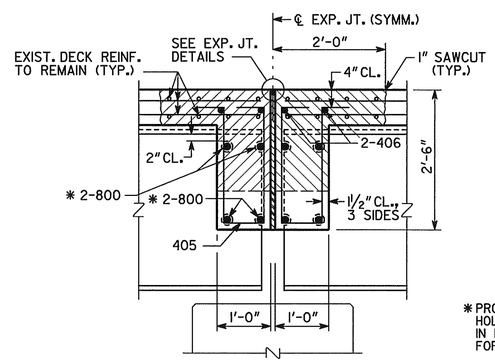

* PROVIDE DRILLED HOLES AND SLOTS IN INTERIOR BEAMS FOR 800 BARS.

DENOTES CONCRETE TO BE REMOVED

SECTION THRU EDGE BEAM

(BENTS 2 - 4)

LOCATION	NO. OF LOC.	MARK	LENGTH FT.	LENGTH IN.	NO. BARS REQ'D.	TYPE	A	G	B FT.	B IN.	C FT.	C IN.	D FT.	D IN.	E FT.	E IN.
BENT 1	1															
		402	2- 10		36	3			2- 0		0-10					
		403	2- 8		36	3			2- 0		0- 8					
		404	2- 9		56	34	6		0- 6		1- 3		0- 6		1- 3	
BENT 2	1															
		405	5- 6		112	31	4	4	0- 9		2- 0		2- 0			
		406A	15- 3		6	1										
		406B	12- 8		2	1										
		406C	14- 6		2	1										
		406D	17- 4		2	1										
		406E	24- 9		2	1										
		800A	12- 8		16	1										
		800C	14- 8		8	1										
		800D	12- 8		8	1										
BENT 3	1															
		405	5- 6		112	31	4	4	0- 9		2- 0		2- 0			
		406C	14- 6		4	1										
		406D	17- 4		4	1										
		406E	24- 9		4	1										
		800C	14- 8		16	1										
		800D	12- 8		16	1										
BENT 4	1															
		405	5- 6		112	31	4	4	0- 9		2- 0		2- 0			
		406F	14- 8		4	1										
		406G	17- 6		4	1										
		406H	25- 0		4	1										
		800E	14-10		16	1										

LOCATION	NO. OF LOC.	MARK	LENGTH FT.	LENGTH IN.	NO. BARS REQ'D.	TYPE	A	G	B FT.	B IN.	C FT.	C IN.	D FT.	D IN.	E FT.	E IN.
		800F	12-10		16	1										
BENT 5	1															
		402	2-10		39	3			2- 0		0-10					
		403	2- 8		39	3			2- 0		0- 8					
		404	2- 9		59	34	6		0- 6		1- 3		0- 6		1- 3	

BRIDGE NO. 5

JBT J.B. TRIMBLE, INC.
6445 Powers Ferry Rd.
Atlanta GA 30339
(770) 952-1022

GEORGIA
DEPARTMENT OF TRANSPORTATION
OPERATIONS DIVISION-OFFICE OF MAINTENANCE

DISTRICT 7 BRIDGE REPAIR (DECK REHABILITATION)
I-285 OVER S.R. 14 AND CSX RAILROAD
TYPICAL SECTIONS
FULTON COUNTY NHS-M002-00 (136)

SCALE: NO SCALE U.N.O. APRIL 2004

DESIGNED PJC | CHECKED GLE | REVIEWED EHG
DRAWN ITD | DESIGN GROUP MAINTENANCE | APPROVED STH

REVISIONS | DATE | BY

BRIDGE SHEET 3 OF 3

C:\DGN\313029\136\BR9\136B9DS.DGN 1-14-04 ITD

...\136B9DS.dgn 6/30/2004 1:47:22 PM