STATE	PROJECT NUMBER	SHEET NO.	TOTAL SHEETS
GA.	NHS-M002-00 (136) CT 2	15	24

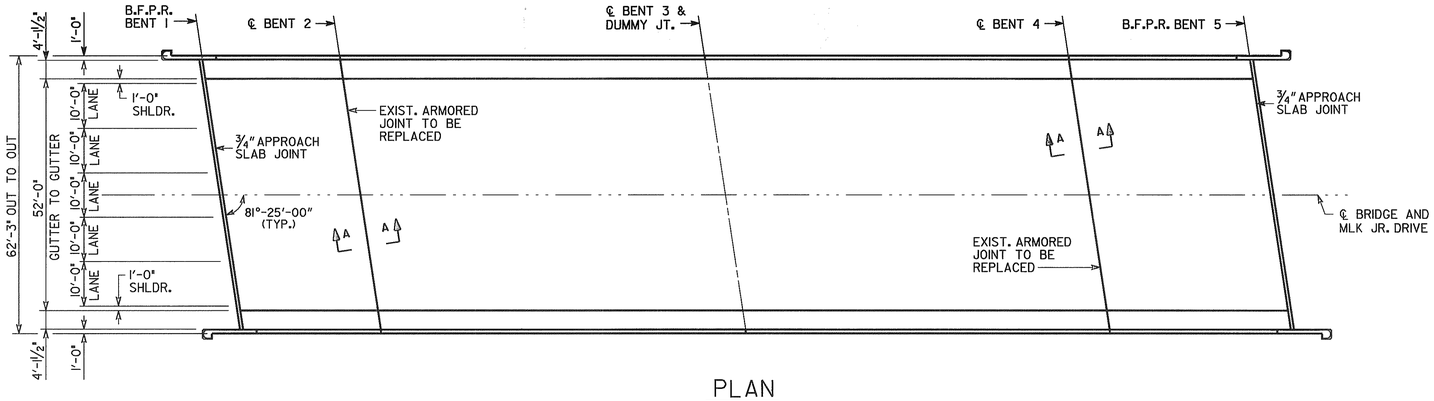

PLAN

JOINT OPENING (W)				
LOCATION	W	TEMPERATURE		
		30°F	60°F	90°F
BT 1, 5 APPR.	1"	¾"	¾"	¾"
BT 2, 4 EXP.	2 3/16"	2"	1¾"	1½"

NOTE: W DENOTES SEAL WDTH PRIOR TO INSTALATION

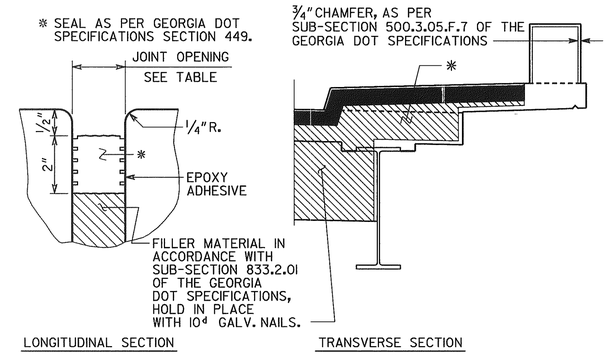

EXPANSION JOINTS DETAILS

MIN. LAP
#4 BAR = 2'-0"
#9 BAR = 3'-6"

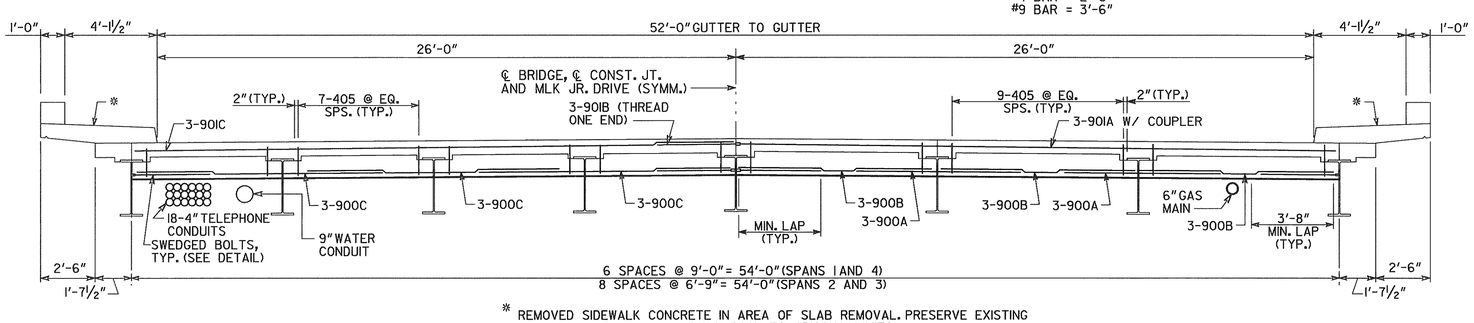

* REMOVED SIDEWALK CONCRETE IN AREA OF SLAB REMOVAL. PRESERVE EXISTING REINFORCEMENT. CAST SIDEWALK BACK TO ORIGINAL LIMITS.

SECTION THRU EDGE BEAM
(LOOKING AHEAD)

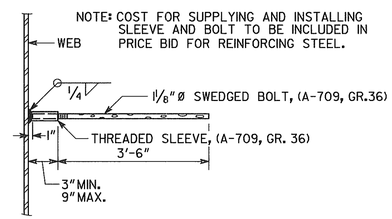

EDGE BEAM BAR LAP DETAIL

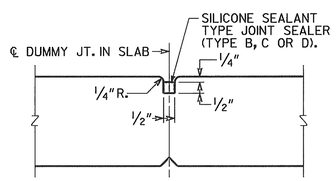

DUMMY JOINT DETAIL
(BENT 3)

NOTES

1. CARE SHALL BE EXERCISED IN REMOVAL OF EXISTING CONCRETE TO MAKE CUTS VERTICAL AND TO RETAIN EXISTING REINFORCEMENT. ANY EXISTING REINFORCEMENT STEEL DAMAGED DURING REMOVAL SHALL BE REPLACED BY THE CONTRACTOR AT NO ADDITIONAL COST.

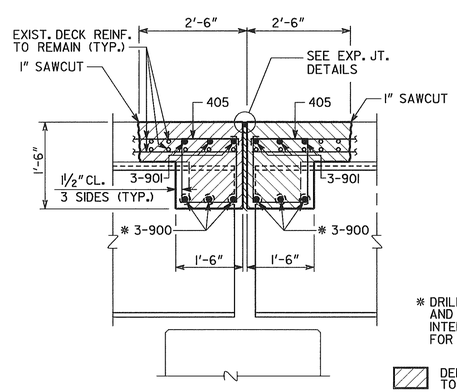

SECTION @ ROADWAY

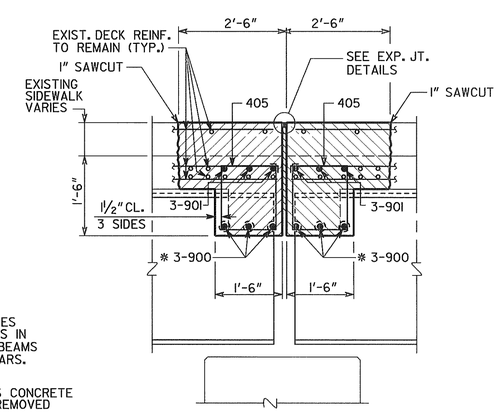

SECTION @ SIDEWALK

* DRILL HOLES AND SLOTS IN INTERIOR BEAMS FOR #9 BARS.

DENOTES CONCRETE TO BE REMOVED

SECTION A-A
(BENTS 2 & 4)

LOCATION	NO. OF LOC.	MARK	LENGTH FT.	LENGTH IN.	NO. BARS REQ'D.	TYPE	A	G	B FT.	B IN.	C FT.	C IN.	D FT.	D IN.
BENTS 2 OR 4	2													
		405	5	9	110	25	4	4	1	3	1	3		
		900A	8	0	12	1								
		900B	8	9	18	1								
		900C	11	6	18	1								
		901A	27	3	6	1								
		901B	4	0	6	1								
		901C	27	0	6	1								

BRIDGE NO. 4

J.B. TRIMBLE, INC.
6445 Powers Ferry Rd.
Atlanta GA 30339
(770) 952-1022

GEORGIA
DEPARTMENT OF TRANSPORTATION
OPERATIONS DIVISION-OFFICE OF MAINTENANCE

DISTRICT 7 BRIDGE REPAIR (DECK REHABILITATION)
S.R. 139 (MLK JR. DRIVE) OVER I-285
DECK PLAN

FULTON COUNTY — NHS-M002-00 (136)

SCALE: NO SCALE U.N.O. — APRIL 2004

BRIDGE SHEET 2 OF 2

REVISIONS — DATE — BY

DESIGNED PJC — CHECKED GLE — REVIEWED EHG
DRAWN ITD — DESIGN GROUP MAINTENANCE — APPROVED STH

C:\DGN\313029\136\BR8\136BB DP.DGN 1-7-04 ITD