STATE	PROJECT NUMBER	SHEET NO.	TOTAL SHEETS
GA.	NHS-M002-00 (136) CT 2	12	24

NOTE: LANE AND SHOULDER WIDTH DIMENSIONS ARE FROM ORIGINAL DESIGN PLANS. ACTUAL WIDTHS SHALL BE VERIFIED BY THE CONTRACTOR PRIOR TO CONSTRUCTION.

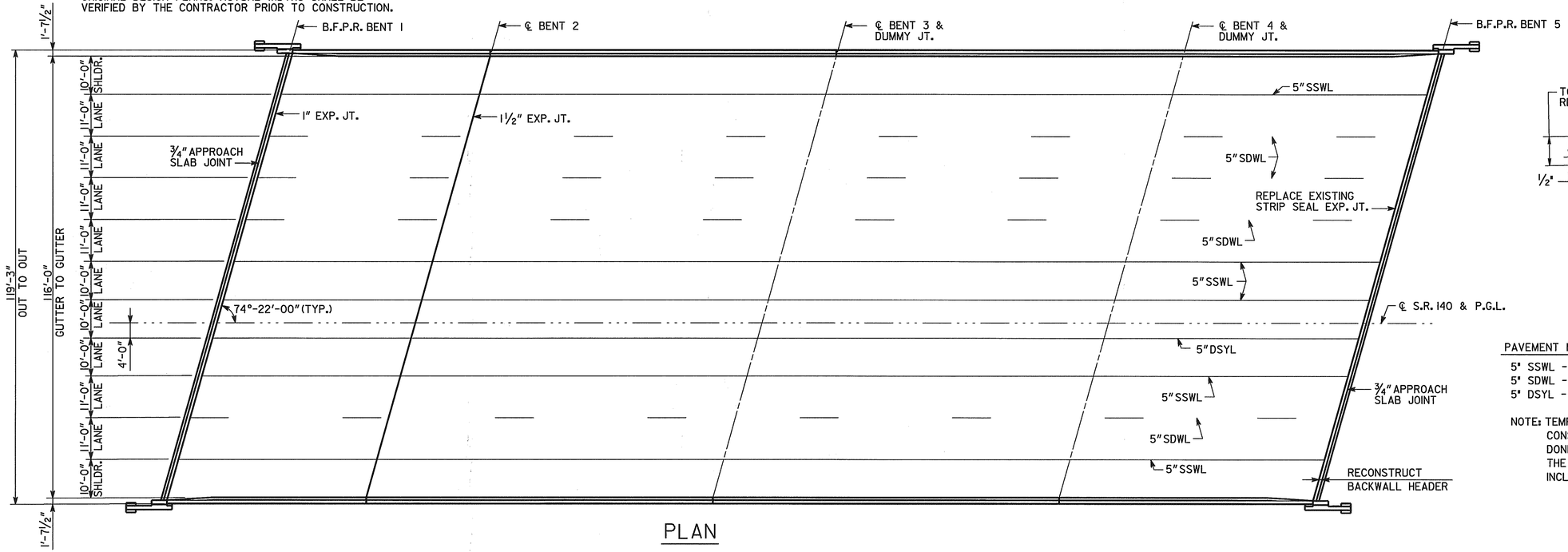

PLAN

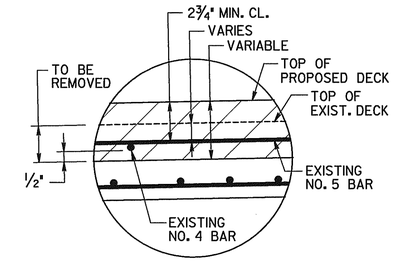

DETAIL "A"

PAVEMENT MARKING LEGEND

5" SSWL - 5" SINGLE SOLID WHITE LINE
5" SDWL - 5" SINGLE DASHED WHITE LINE
5" DSYL - 5" DOUBLE SOLID YELLOW LINE

NOTE: TEMPORARY STRIPING SHALL BE USED DURING CONSTRUCTION. PERMANENT STRIPING SHALL BE DONE AFTER ALL DECK OVERLAY WORK IS COMPLETED. THE COST OF TEMPORARY STRIPING SHALL BE INCLUDED IN THE COST FOR TRAFFIC CONTROL.

NOTES :

1. THERE ARE NO COVER METER READINGS AVAILABLE FOR THIS BRIDGE.
2. EDGE BEAM REPLACEMENT SHALL BE COMPLETED PRIOR TO DECK OVERLAY.

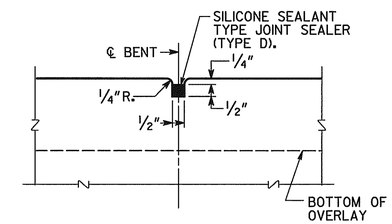

DUMMY JOINT DETAIL

NO SCALE

SUMMARY OF QUANTITIES

PAY ITEM NUMBER	QUANTITY	UNIT	PAY ITEM
449-1620	244	LF	LOW-DENSITY, CLOSED-CELL, X-LINKED, ETHYLENE VINYL ACETATE, POLYETHYLENE COPOLYMER, NITROGEN-BLOWN SEAL, BR NO-3, BENT NO-1
449-1620	122	LF	LOW-DENSITY, CLOSED-CELL, X-LINKED, ETHYLENE VINYL ACETATE, POLYETHYLENE COPOLYMER, NITROGEN-BLOWN SEAL, BR NO-3, BENT NO-2
449-1620	244	LF	LOW-DENSITY, CLOSED-CELL, X-LINKED, ETHYLENE VINYL ACETATE, POLYETHYLENE COPOLYMER, NITROGEN-BLOWN SEAL, BR NO-3, BENT NO-5
500-0100	3830	SY	GROOVED CONCRETE
504-0600	17	CY	TWENTY-FOUR HOUR ACCELERATED STRENGTH CONC
511-3000	LUMP	LS	SUPERSTR REINF STEEL, BR NO-3 (3600)
519-0400	3830	SY	CONCRETE OVERLAY, PORTLAND CEMENT, VARB THK
521-1000	230	SF	PATCHING CONCRETE BRIDGE DECK
528-0750	4450	LF	EPOXY SEALING OF CONCRETE CRACKS
540-1202	LUMP		REMOVAL OF PARTS OF EXISTING BR, BR NO-3

JOINT OPENING (W)				
LOCATION	W	TEMPERATURE		
		30°F	60°F	90°F
BT 1, 5 APPR.	1"	¾"	¾"	¾"
BT 1 EXP.	1¼"	1⅛"	1"	⅞"
BT 2 EXP.	1⅞"	1⅞"	1½"	1⅛"
BT 5 EXP.	2³⁄₁₆"	2⅛"	1¾"	1⅜"

NOTE: W DENOTES SEAL WIDTH PRIOR TO INSTALLATION

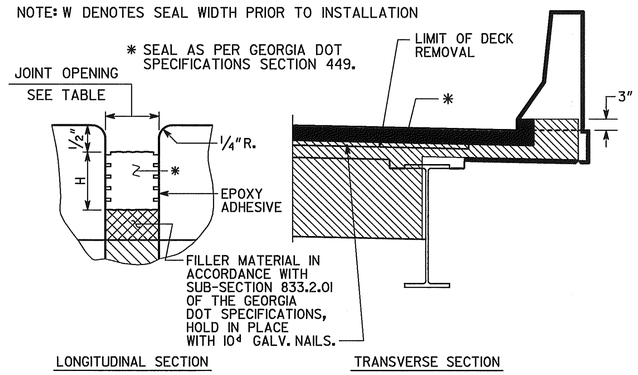

EXPANSION JOINT DETAILS

BRIDGE NO. 3

J.B. TRIMBLE, INC.
6445 Powers Ferry Rd.
Atlanta GA 30339
(770) 952-1022

GEORGIA
DEPARTMENT OF TRANSPORTATION
OPERATIONS DIVISION-OFFICE OF MAINTENANCE

DISTRICT 7 BRIDGE REPAIR (DECK REHABILITATION)
S.R. 140 (HOLCOMB BRIDGE ROAD)
OVER S.R. 400 (U.S. 19)
DECK PLAN

FULTON COUNTY NHS-M002-00 (136)

SCALE: NO SCALE U.N.O. APRIL 2004

BY	REVISIONS	DATE

BRIDGE SHEET 2 OF 3

DESIGNED PJC DRAWN ITD CHECKED GLE DESIGN GROUP MAINTENANCE REVIEWED EHG APPROVED STH

C:\DGN\313029\136\BR7\136B7DP.DGN 11-20-03 ITD

...\136b7dp.dgn 6/30/2004 1:45:10 PM