STATE	PROJECT NUMBER	SHEET NO.	TOTAL SHEETS
GA.	NHS-M002-00 (136) CT 2	10	24

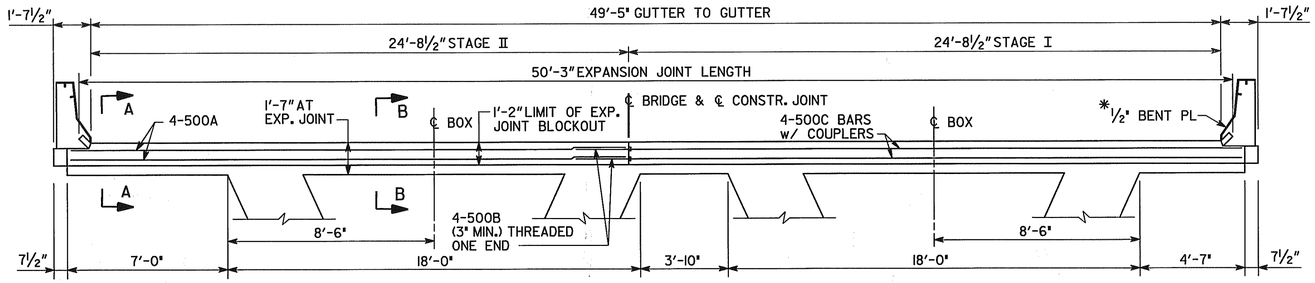

SECTION AT ABUTMENT 5-14

LOCATION	NO. OF LOC.	MARK	LENGTH FT.	LENGTH IN.	NO. BARS REQ'D.	TYPE	A	G	B FT.	B IN.	C FT.	C IN.	D FT.	D IN.	E FT.	E IN.	N	θ
BENT 5-14	1																	
		400A	25	4	4	1												
		400B	2	6	4	1												
		400C	25	8	4	1												
		400D	3	4	52	25	6	6	1	2	0	6						
		500A	25	4	6	1												
		500B	3	0	6	1												
		500C	25	8	6	1												

NOTES:

1. #5 BARS MIN. LAP = 2'-6".
2. ALL DIMENSIONS SHOULD BE VERIFIED IN THE FIELD PRIOR TO FABRICATION OF JOINT.

* REMOVE EXISTING PLATE AND CONCRETE AS REQUIRED TO INSTALL JOINT. INSTALL NEW ½" BENT PLATE TO MATCH EXISTING CONFIGURATION. COST SHALL BE INCLUDED IN THE OVERALL BID SUBMITTED.

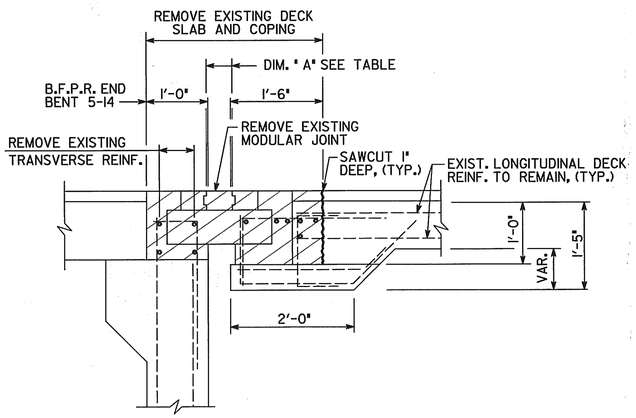

EXISTING

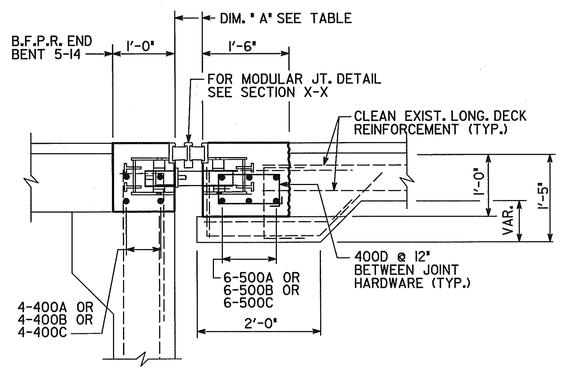

PROPOSED

SECTION A-A

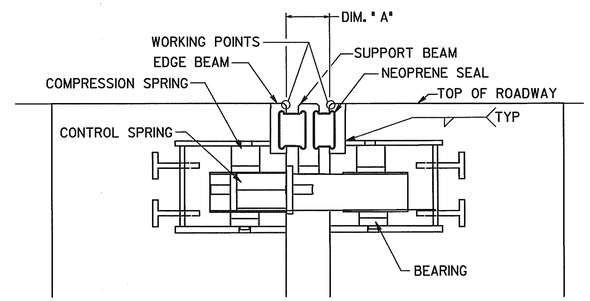

SECTION X-X

JOINT OPENING	
TEMP °F	DIM. "A" (IN)
0	6.58
10	6.32
20	6.06
30	5.80
40	5.54
50	5.26
60	5.00
70	4.74
80	4.48
90	4.22
100	3.96
110	3.70
120	3.44

JOINT REPLACEMENT CONSTRUCTION SEQUENCE

PERFORM THE FOLLOWING IN ACCORDANCE WITH THE TRAFFIC CONTROL PLANS:

1. SAWCUT AND REMOVE EXISTING CONCRETE TO LIMITS SHOWN ON PLANS.
2. REMOVE EXISTING TRANSVERSE DECK SLAB REINFORCEMENT.
3. CLEAN EXISTING REINFORCEMENT TO REMAIN IN PLACE.
4. INSTALL NEW MODULAR DECK JOINT AND PLACE NEW TRANSVERSE REINF. REPLACE ANY REINFORCEMENT DAMAGED DURING REMOVAL. SPLICE STEEL RETAINERS BETWEEN STAGES USING FULL PENETRATION GROOVE WELDS.
5. FORM AND CAST CONCRETE IN ACCORDANCE WITH SPECIAL PROVISION 503.

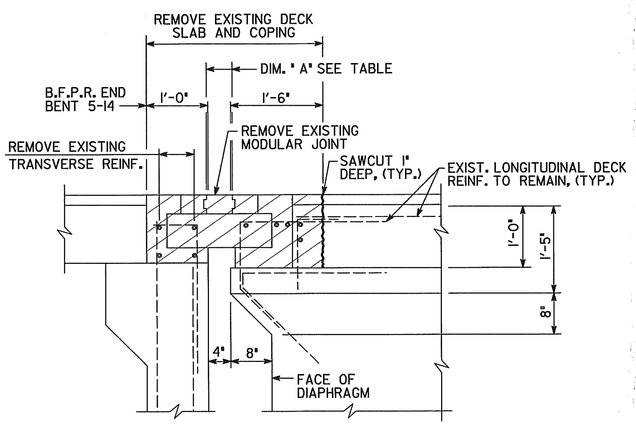

EXISTING

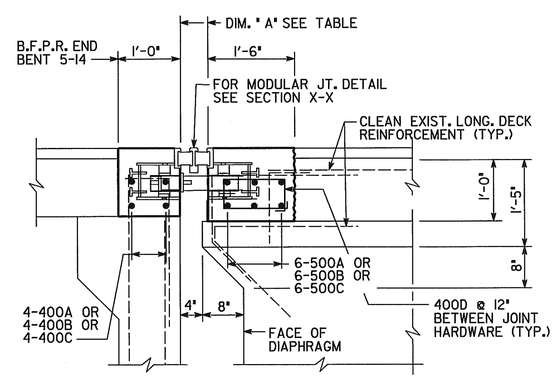

PROPOSED

SECTION B-B

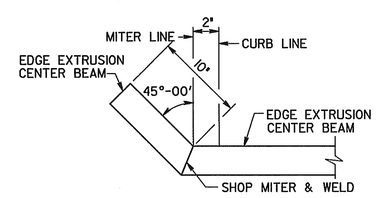

CURB DETAIL

BRIDGE NO. 2

JBT J.B. TRIMBLE, INC.
6445 Powers Ferry Rd.
Atlanta GA 30339
(770) 952-1022

GEORGIA
DEPARTMENT OF TRANSPORTATION
OPERATIONS DIVISION-OFFICE OF MAINTENANCE

DISTRICT 7 BRIDGE REPAIR (DECK REHABILITATION)
RAMP I-85 SB TO I-285 EB
TYPICAL SECTIONS & JOINT DETAILS
DEKALB COUNTY NHS-M002-00 (136)

SCALE: NO SCALE U.N.O. APRIL 2004

BY	REVISIONS	DATE

BRIDGE SHEET 3 OF 3

DESIGNED PJC | CHECKED GLE | REVIEWED EHG
DRAWN ITD | DESIGN GROUP MAINTENANCE | APPROVED STH

C:\DGN\313029\136\BR6\136B6DS.DGN 1-17-04 ITD

...\136B6ds.dgn 9/30/2004 1:42:51 PM