STATE	PROJECT NUMBER	SHEET NO.	TOTAL SHEETS
GA.	NHS-M002-00 (136) CT 2	7	24

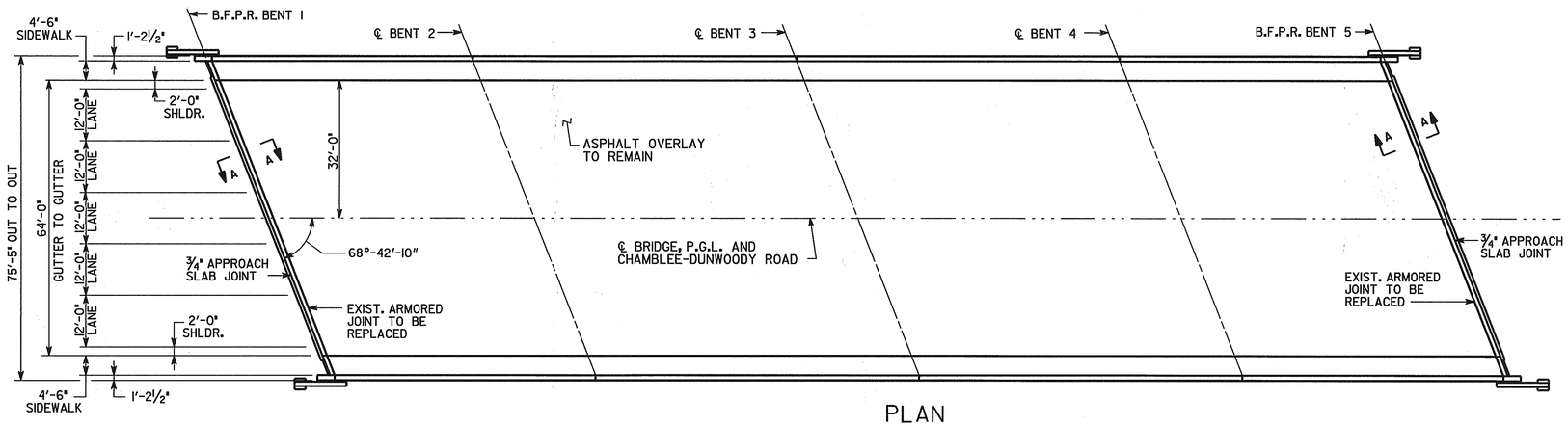

PLAN

MIN. LAP
#4 BAR = 2'-0"
#9 BAR = 3'-6"

JOINT OPENING (W)				
LOCATION	W	TEMPERATURE		
		30°F	60°F	90°F
BT 1, 5 APPR.	1¼"	1⅛"	1"	⅞"
BT 1, 5 EXP.	2³⁄₁₆"	2¹⁄₁₆"	1¾"	1⁷⁄₁₆"

NOTE: W DENOTES SEAL WDTH PRIOR TO INSTALATION

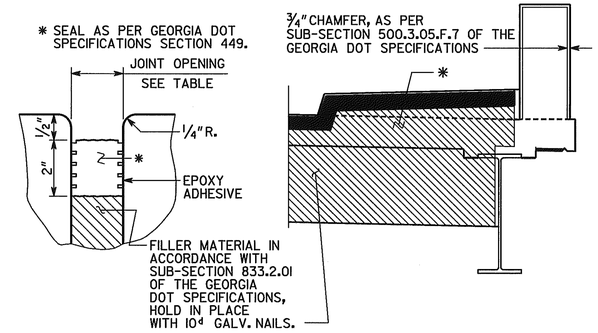

EXPANSION JOINTS DETAILS

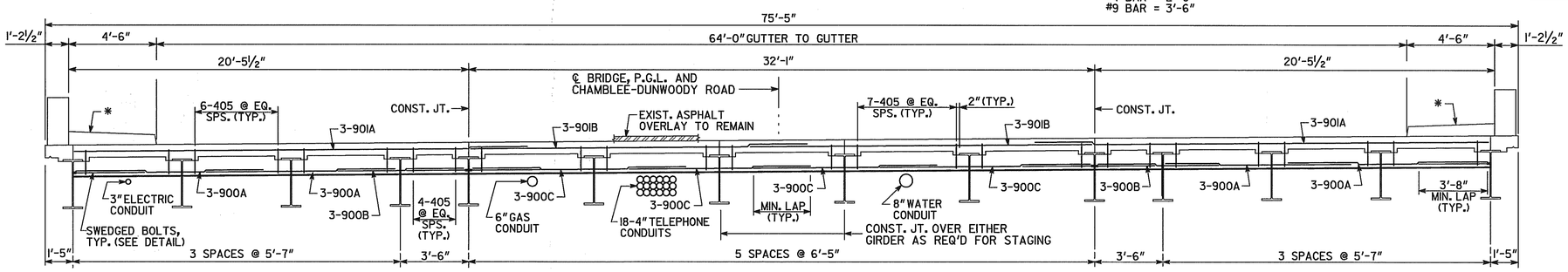

* REMOVED SIDEWALK CONCRETE IN AREA OF SLAB REMOVAL. PRESERVE EXISTING REINFORCEMENT. CAST SIDEWALK BACK TO ORIGINAL LIMITS.

SECTION THRU EDGE BEAM
(LOOKING AHEAD)

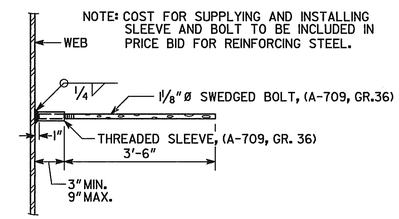

EDGE BEAM BAR LAP DETAIL

NOTES

1. CARE SHALL BE EXERCISED IN REMOVAL OF EXISTING CONCRETE TO MAKE CUTS VERTICAL AND TO RETAIN EXISTING REINFORCEMENT. ANY EXISTING REINFORCEMENT STEEL DAMAGED DURING REMOVAL SHALL BE REPLACED BY THE CONTRACTOR AT NO ADDITIONAL COST.
2. REPAIR ASPHALT DAMAGED DURING JOINT AND EDGE BEAM INSTALLATION. COST FOR THIS WORK SHALL BE INCLUDED IN THE OVERALL BID SUBMITTED.

LOCATION	NO. OF LOC.	MARK	LENGTH FT.	LENGTH IN.	NO. BARS REQ'D.	TYPE	A	G	B FT.	B IN.	C FT.	C IN.	D FT.	D IN.
BENTS 1 OR 5	2													
		400A	19	6	8	1								
		400B	18	6	8	1								
		400C	4	0	6	1								
		401	1	0	10	1								
		405	5	9	79	25	4	4	1 - 3		1 - 3			
		900A	11	0	12	1								
		900B	8	0	6	1								
		900C	11	6	12	1								
		901A	25	6	6	1								
		901B	19	0	6	1								

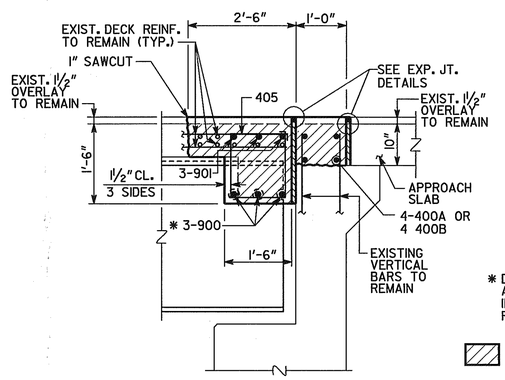

SECTION @ ROADWAY

* DRILL HOLES AND SLOTS IN INTERIOR BEAMS FOR #9 BARS.

DENOTES CONCRETE TO BE REMOVED

SECTION A-A
(BENTS 1 & 5)

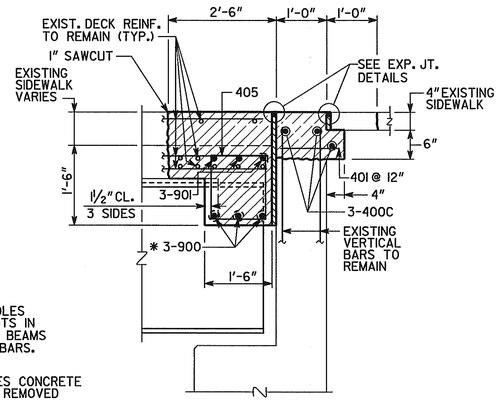

SECTION @ SIDEWALK

BRIDGE NO. 1

JBT DECK PLAN

J.B. TRIMBLE, INC.
6445 Powers Ferry Rd.
Atlanta GA 30339
(770) 952-1022

GEORGIA
DEPARTMENT OF TRANSPORTATION
OPERATIONS DIVISION-OFFICE OF MAINTENANCE

DISTRICT 7 BRIDGE REPAIR (DECK REHABILITATION)
CR 5156 (CHAMBLEE DUNWOODY RD) OVER I-285
DECK PLAN
DEKALB COUNTY NHS-M002-00 (136)

SCALE: NO SCALE U.N.O. APRIL 2004

DATE	REVISIONS	BY

BRIDGE SHEET 2 OF 2

DESIGNED PJC | CHECKED GLE | REVIEWED EHG
DRAWN ITD | DESIGN GROUP MAINTENANCE | APPROVED STH

C:\DGN\313029\136\BR5\136B5 DP.DGN 11-25-03 ITD

\136b5b.dgn 6/30/2004 1:44:34 PM