STATE	PROJECT NUMBER	SHEET NO.	TOTAL SHEETS
GA.	NHS-M002-00 (136) CT 1	32	51

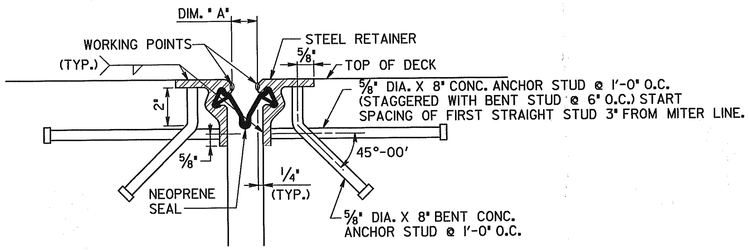

SECTION X-X

JOINT OPENING	
TEMP °F	DIM. "A" (IN)
0	2.45
10	2.38
20	2.30
30	2.23
40	2.15
50	2.08
60	2.00
70	1.92
80	1.85
90	1.77
100	1.70
110	1.62
120	1.55

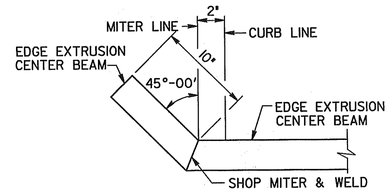

CURB DETAIL

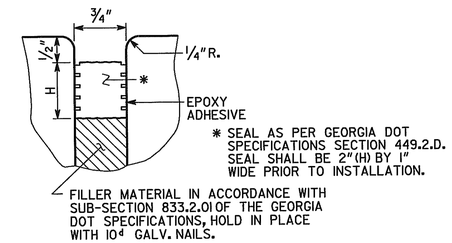

APPROACH SLAB JOINT DETAILS

(BENTS 1 & 5)

LOCATION	NO. OF LOC.	MARK	LENGTH FT.	LENGTH IN.	NO. BARS REQ'D.	TYPE	A	G	B FT.	B IN.	C FT.	C IN.	D FT.	D IN.
BENT 1	1													
		405	5-	3	211	25	4	4	0- 9		2- 0			
		406A	29-	0	6	1								
		406B	24-	6	12	1								
		406C	27-	5	12	1								
		406D	19-	8	12	1								
		406E	31-	0	6	1								
		406F	32-	0	6	1								
		800A	6-	10	24	1								
		800B	9-	6	24	1								
		800C	11-	3	24	1								
		800D	10-	3	16	1								
		800E	9-	6	16	1								
		800F	12-	1	12	1								
BENT 5	1													
		405	5-	3	211	25	4	4	0- 9		2- 0			
		406A	29-	6	6	1								
		406B	24-	6	12	1								
		406C	27-	5	12	1								
		406D	19-	8	12	1								
		406E	32-	0	6	1								
		406F	34-	0	6	1								
		800A	6-	11	24	1								
		800B	9-	6	24	1								
		800C	11-	3	24	1								
		800D	10-	3	16	1								
		800E	9-	11	16	1								
		800F	12-	9	12	1								

NOTES

1. CARE SHALL BE EXERCISED IN REMOVAL OF EXISTING CONCRETE TO MAKE CUTS VERTICAL AND TO RETAIN EXISTING REINFORCEMENT. ANY EXISTING REINFORCEMENT STEEL DAMAGED DURING REMOVAL SHALL BE REPLACED BY THE CONTRACTOR AT NO ADDITIONAL COST.

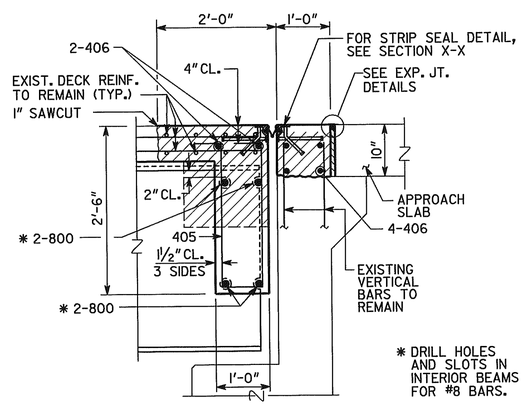

SECTION A-A

(BENTS 1 & 5)

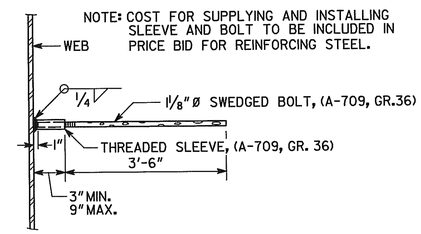

EDGE BEAM BAR LAP DETAIL

BRIDGE NO. 3

J.B. TRIMBLE, INC.
6445 Powers Ferry Rd.
Atlanta GA 30339
(770) 952-1022

GEORGIA
DEPARTMENT OF TRANSPORTATION
OPERATIONS DIVISION-OFFICE OF MAINTENANCE

DISTRICT 7 BRIDGE REPAIR (DECK REHABILITATION)
I-285 OVER S.R. 141
(PEACHTREE INDUSTRAIL BLVD.)
JOINT DETAILS
DEKALB COUNTY NHS-M002-00 (136)

SCALE: NO SCALE U.N.O. APRIL 2004

BY	REVISIONS	DATE

BRIDGE SHEET 4 OF 4

DESIGNED PJC | CHECKED GLE | REVIEWED EHG
DRAWN ITD | DESIGN GROUP MAINTENANCE | APPROVED STH

C:\DGN\313029\136\BR3\136B3JT.DGN 1-19-04 ITD

\136B3JT.dgn 6/30/2004 1:48:18 PM