STATE	PROJECT NUMBER	SHEET NO.	TOTAL SHEETS
GA.	NHS-M002-00 (136) CT 1	28	51

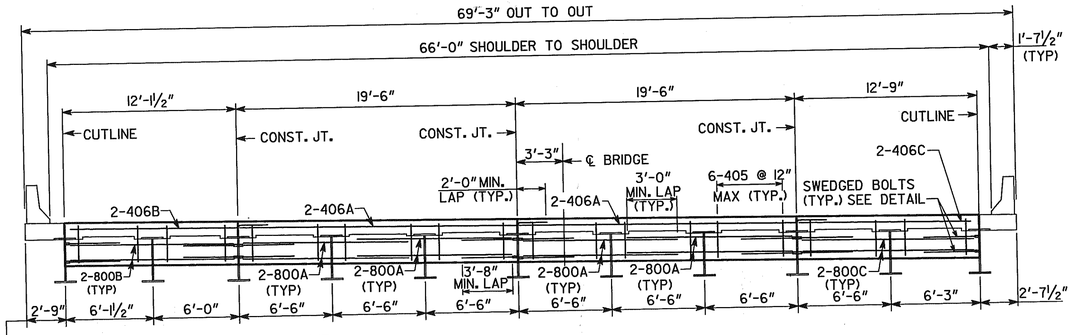

DIMENSIONS TRUE AT B.F.P.R. AND ℄ BENT ONLY. BEAMS ARE SPACED AS CHORDS OF CONCENTRIC CIRCLES AT THESE POINTS.

SECTION THRU EDGEBEAM
(LOOKING AHEAD)

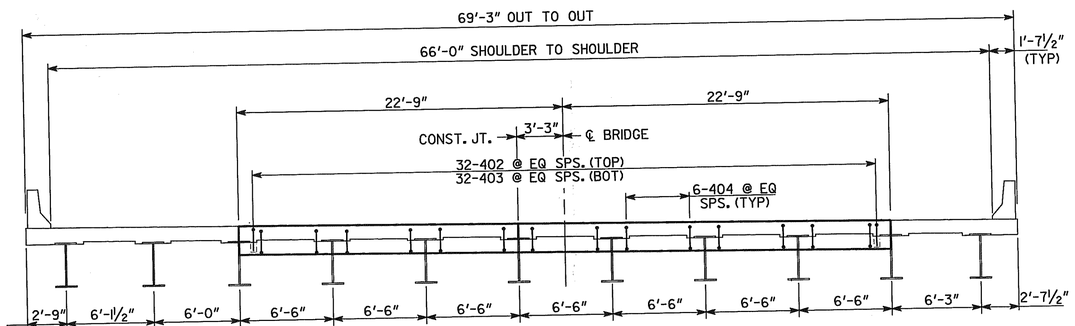

DIMENSIONS TRUE AT B.F.P.R. AND ℄ BENT ONLY. BEAMS ARE SPACED AS CHORDS OF CONCENTRIC CIRCLES AT THESE POINTS.

SECTION THRU ENDWALL
(LOOKING AHEAD)

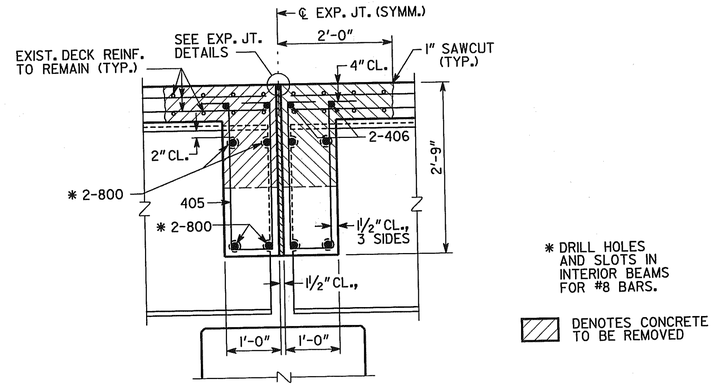

SECTION THRU EDGE BEAM
(BENTS 2, 3 & 4)

* DRILL HOLES AND SLOTS IN INTERIOR BEAMS FOR #8 BARS.

DENOTES CONCRETE TO BE REMOVED

LOCATION	NO. OF LOC.	MARK	LENGTH FT.	LENGTH IN.	NO. BARS REQ'D.	TYPE	A	G	B FT.	B IN.	C FT.	C IN.	D FT.	D IN.	E FT.	E IN.
BENT 1 OR 5	2															
		402	2	10	32	3			2	0	0	10				
		403	2	8	32	3			2	0	0	8				
		404	2	9	42	34	6		0	6	1	3	0	6	1	3
BENT 2, 3 OR 4	3															
		405	6	0	120	31	4	4	0	9	2	3	2	3		
		406A	22	0	8	1										
		406B	14	3	4	1										
		406C	12	6	4	1										
		800A	11	2	32	1										
		800B	11	9	8	1										
		800C	12	5	8	1										

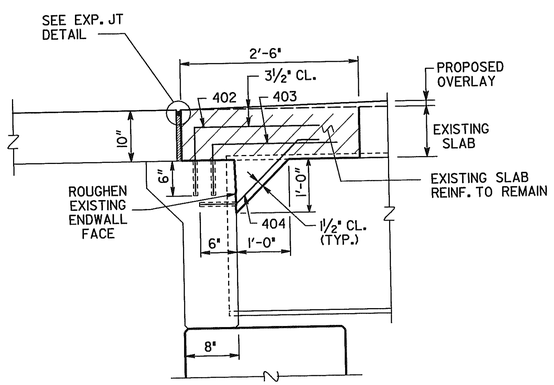

SLAB REINFORCEMENT NOT SHOWN.

SECTION THRU ENDWALL

NOTES :

1. THERE ARE NO COVER METER READINGS AVAILABLE FOR THIS BRIDGE.
2. EDGE BEAM REPLACEMENT SHALL BE COMPLETED PRIOR TO DECK OVERLAY.

BRIDGE NO. 2

JBT J.B. TRIMBLE, INC.
6445 Powers Ferry Rd.
Atlanta GA 30339
(770) 952-1022

GEORGIA
DEPARTMENT OF TRANSPORTATION
OPERATIONS DIVISION-OFFICE OF MAINTENANCE

DISTRICT 7 BRIDGE REPAIR (DECK REHABILITATION)
I-285 RAMP OVER CCBL OVER I-75
DECK SECTIONS

COBB COUNTY NHS-M002-00 (136)

SCALE: NO SCALE U.N.O. APRIL 2004

DESIGNED PJC	CHECKED GLE	REVIEWED EHG
DRAWN ITD	DESIGN GROUP MAINTENANCE	APPROVED STH

REVISIONS | DATE | BY

BRIDGE SHEET 3 OF 3

C:\DGN\313029\136\BR2\136B2DS.DGN 11-19-03 ITD