STATE	PROJECT NUMBER	SHEET NO.	TOTAL SHEETS
GA.	NHS-M002-00 (136) CT 1	25A	51

USED ON CONSTRUCTION

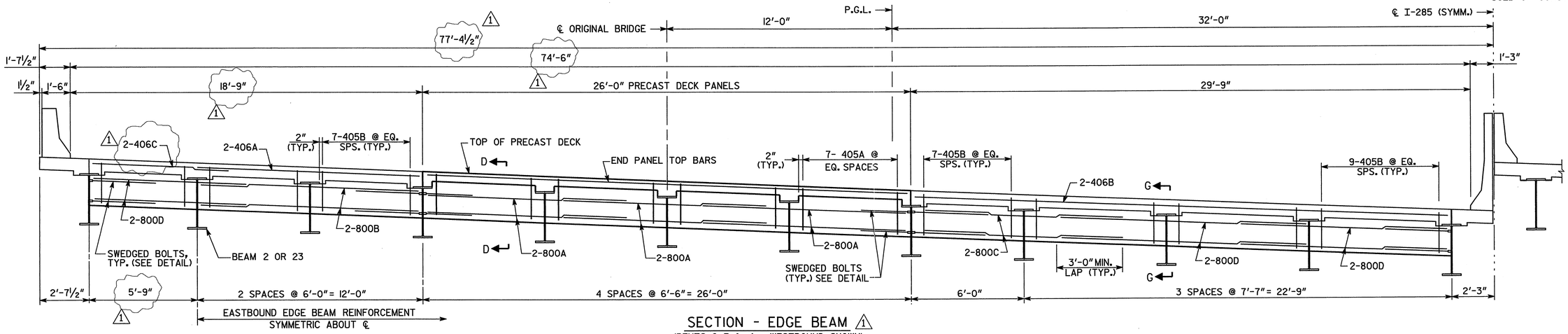

SECTION - EDGE BEAM 1
(BENTS 2, 3 & 4 - WESTBOUND SHOWN)

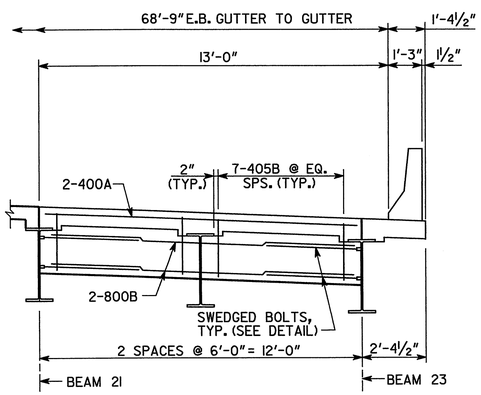

SECTION - EDGE BEAM 1
(BENTS 2, 3 & 4 - EASTBOUND)

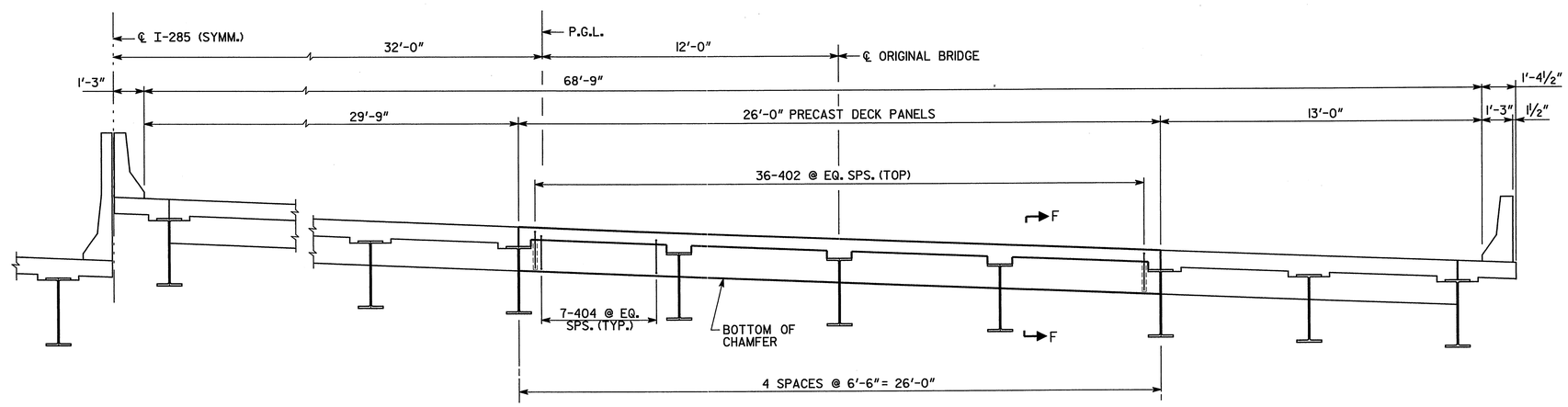

ENDWALL SECTION
(BENTS 1 & 5)

LOCATION	NO. OF LOC.	MARK	LENGTH FT.	LENGTH IN.	NO. BARS REQ'D.	TYPE	A	G	B FT.	B IN.	C FT.	C IN.	D FT.	D IN.	E FT.	E IN.
BENT 1 OR 5	2															
		402	2	9	72	3			1	2	1	7				
		404	2	7	56	34	6		0	6	1	3	0	4	1	3
BENT 2, 3 OR 4	3															
		406A	11	8	8	1										
		406B	28	5	8	1										
1		406C	8	0	4	1			(E.B. ONLY)							
		405A	6	0	112	31	4	4	0	9	2	3	2	3		
1		405B	5	6	234	31	4	4	0	9	2	0	2	0		
		800A	10	9	48	1										
		800B	11	8	16	1										
		800C	11	9	48	1										
1		800D	9	0	8	1			(E.B. ONLY)							

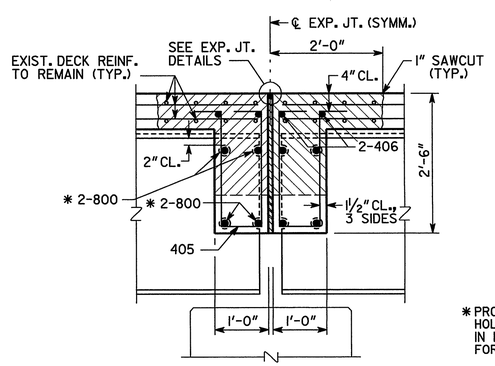

SECTION G-G

*PROVIDE DRILLED HOLES AND SLOTS IN INTERIOR BEAMS FOR 800 BARS.

DENOTES CONCRETE TO BE REMOVED

BRIDGE NO. 1

J.B. TRIMBLE, INC.
6445 Powers Ferry Rd.
Atlanta GA 30339
(770) 952-1022

GEORGIA
DEPARTMENT OF TRANSPORTATION
OPERATIONS DIVISION-OFFICE OF MAINTENANCE

DISTRICT 7 BRIDGE REPAIR (DECK REHABILITATION)
I-285 OVER S.R. 3 (U.S. 41)
EDGE BEAM AND ENDWALL SECTIONS
COBB COUNTY NHS-M002-00 (136)

SCALE: NO SCALE U.N.O. APRIL 2004

REVISIONS	BY	DATE
BRIDGE WIDTH DIMENSIONS	GLE	1-15-05

BRIDGE SHEET 7 OF 7

DESIGNED PJC DRAWN ITD CHECKED GLE DESIGN GROUP MAINTENANCE REVIEWED EHG APPROVED STH

C:\DGN\313029\136\BRI\136BI EB.DGN 1-20-04 ITD

...\136b1b.dgn 3/17/2005 1:26:43 PM