STATE	PROJECT NUMBER	SHEET NO.	TOTAL SHEETS
GA.	NHS-M002-00 (136) CT 1	24	51

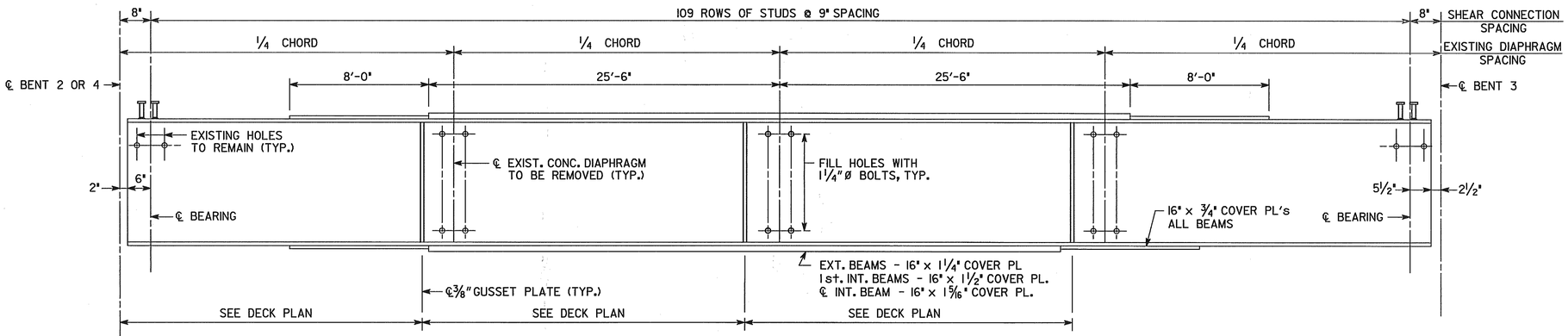

SPAN 2 OR 3

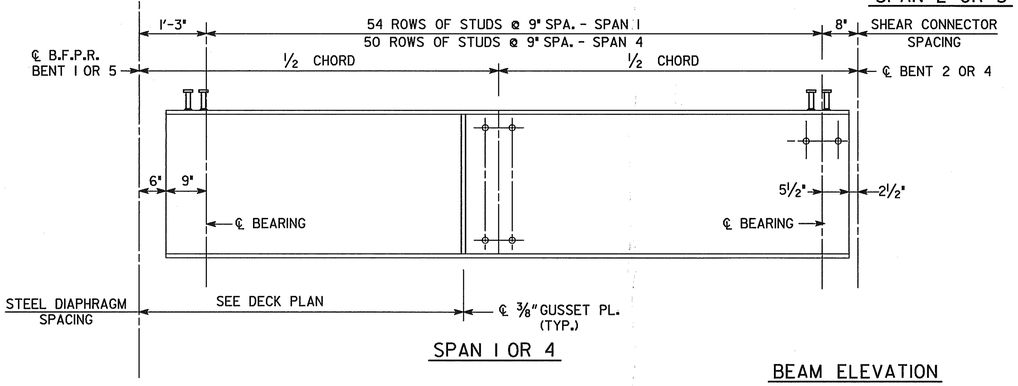

SPAN 1 OR 4

BEAM ELEVATION

NOTE:
ANY DAMAGE TO THE EXISTING PAINT SYSTEM IN THE AREAS OF CONCRETE REMOVAL AND NEW DIAPHRAGM INSTALLATION SHALL BE REPAIRED.

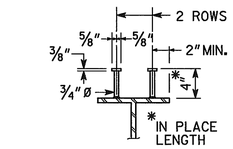

SECTION OF BEAM

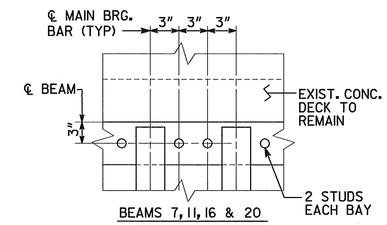

BEAMS 7, 11, 16 & 20

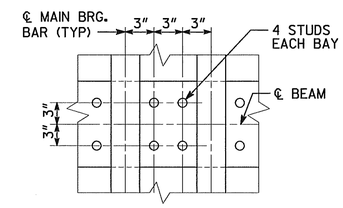

BEAMS 8, 9, 10, 17, 18 & 19

STUD SHEAR CONNECTOR SHALL BE FULLY BUTT WELDED TO TOP FLANGE OF BEAM.

STUD SHEAR CONNECTOR DETAIL

NOTE: COST FOR FURNISHING AND INSTALLING SHEAR CONNECTORS SHALL BE INCLUDED IN THE LUMP SUM PRICE BID FOR STRUCTURAL STEEL.

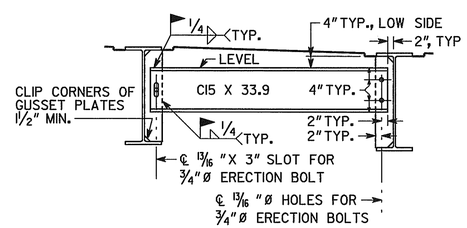

DIAPHRAGM DETAILS

NOTE: WELD DIAPHRAGMS AFTER DECK IS POURED.

JOINT OPENING (W)				
LOCATION	W	TEMPERATURE		
		30°F	60°F	90°F
BT 1, 5 APPR.	1"	3/4"	3/4"	3/4"
BT 2 & 4 EXP.	1 1/4"	1 1/8"	1"	7/8"
BT 3 EXP.	1 7/8"	1 7/8"	1 1/2"	1 1/8"

NOTE: W DENOTES SEAL WIDTH PRIOR TO INSTALLATION

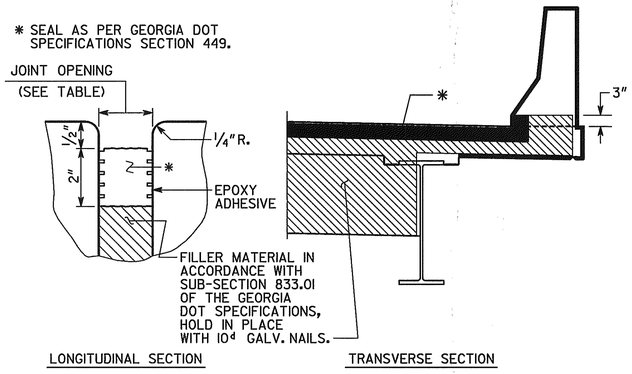

EXPANSION JOINT DETAILS

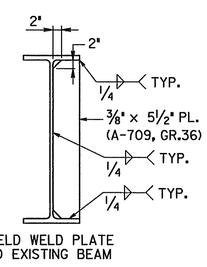

FIELD WELD PLATE TO EXISTING BEAM

GUSSET DETAILS

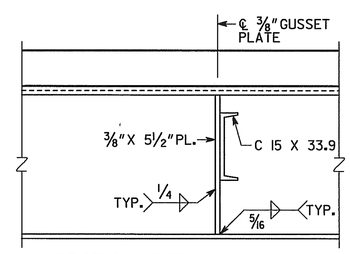

SECTION THRU DIAPHRAGM

BRIDGE NO. 1

J.B. TRIMBLE, INC.
6445 Powers Ferry Rd.
Atlanta GA 30339
(770) 952-1022

GEORGIA
DEPARTMENT OF TRANSPORTATION
OPERATIONS DIVISION-OFFICE OF MAINTENANCE

DISTRICT 7 BRIDGE REPAIR (DECK REHABILITATION)
I-285 OVER S.R. 3 (U.S. 41)
MISCELLANEOUS DETAILS

COBB COUNTY NHS-M002-00 (136)

SCALE: NO SCALE U.N.O. APRIL 2004

BY	REVISIONS	DATE

BRIDGE SHEET 6 OF 7

DESIGNED PJC | CHECKED GLE | REVIEWED EHG
DRAWN ITD | DESIGN GROUP MAINTENANCE | APPROVED STH

C:\DGN\313029\136\BRI\136BI MD2.DGN

...\136bim2.dgn 6/30/2004 11:43:06 PM