STATE	PROJECT NUMBER	SHEET NO.	TOTAL SHEETS
GA.	NHS-M002-00 (136) CT 1	23	51

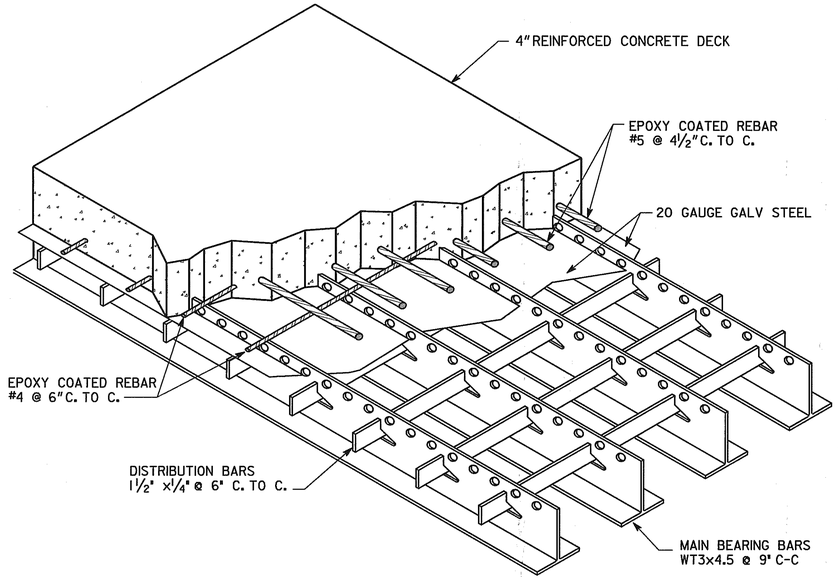

PRECAST DECK PANEL DETAIL

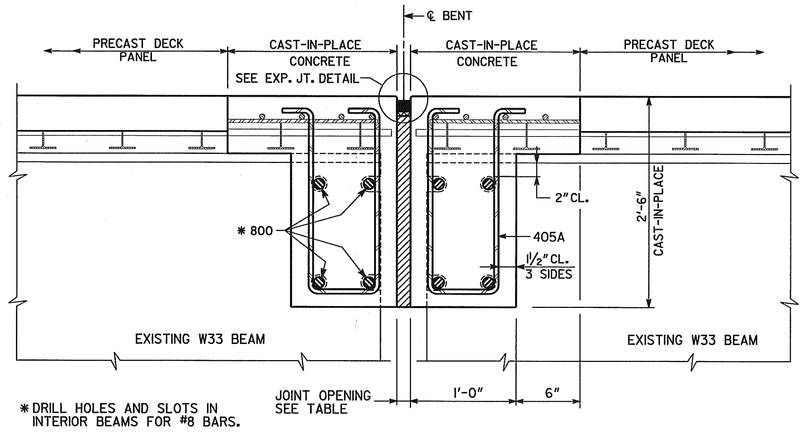

SECTION D-D

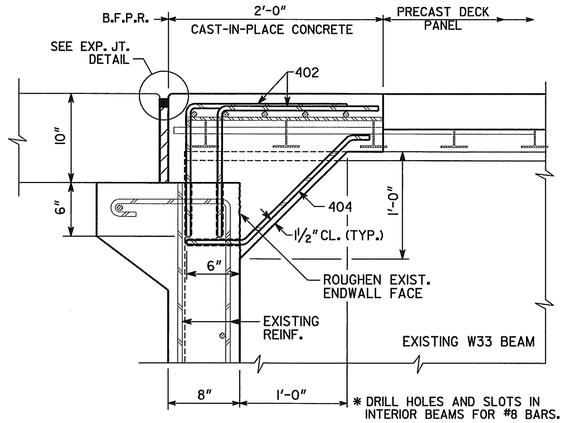

SECTION F-F

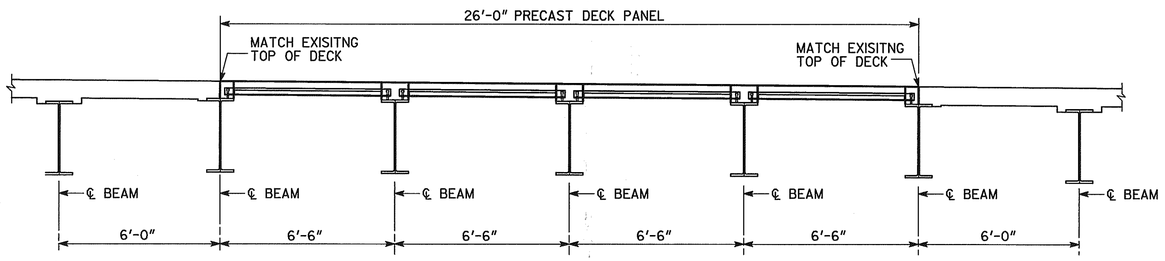

SECTION - PRECAST DECK PANEL

(LEFT BRIDGE LOOKING AHEAD)

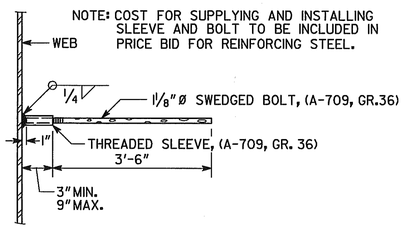

EDGE BEAM BAR LAP DETAIL

NOTES:

1. CAST EDGE BEAMS AND ENDWALL CHAMFERS AT THE SAME TIME AS CLOSURE POURS.

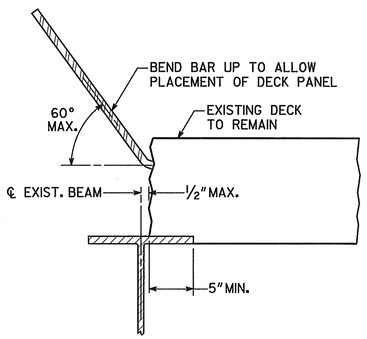

ONE SIDE REMOVED

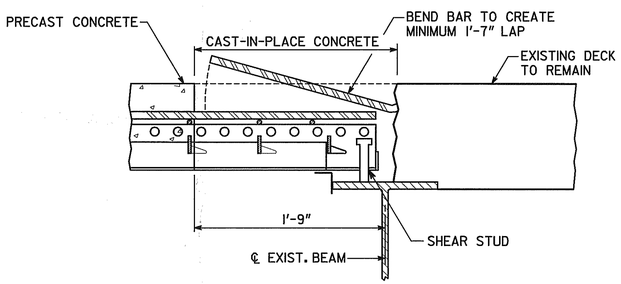

DECK PANEL PLACED

SECTION E-E

BRIDGE NO. 1

J.B. TRIMBLE, INC.
6445 Powers Ferry Rd.
Atlanta GA 30339
(770) 952-1022

GEORGIA
DEPARTMENT OF TRANSPORTATION
OPERATIONS DIVISION-OFFICE OF MAINTENANCE

DISTRICT 7 BRIDGE REPAIR (DECK REHABILITATION)
I-285 OVER S.R. 3 (U.S. 41)
PRECAST DECK SECTIONS

COBB COUNTY NHS-M002-00 (136)

SCALE: NO SCALE U.N.O. APRIL 2004

BY	REVISIONS	DATE

BRIDGE SHEET 5 OF 7

DESIGNED PJC	CHECKED GLE	REVIEWED EHG
DRAWN ITD	DESIGN GROUP MAINTENANCE	APPROVED STH

C:\DGN\313029\136\BRI\136B1 MD1.DGN