STATE	PROJECT NUMBER	SHEET NO.	TOTAL SHEETS
GA.	NHS-M002-00 (136) CT 1	20	51

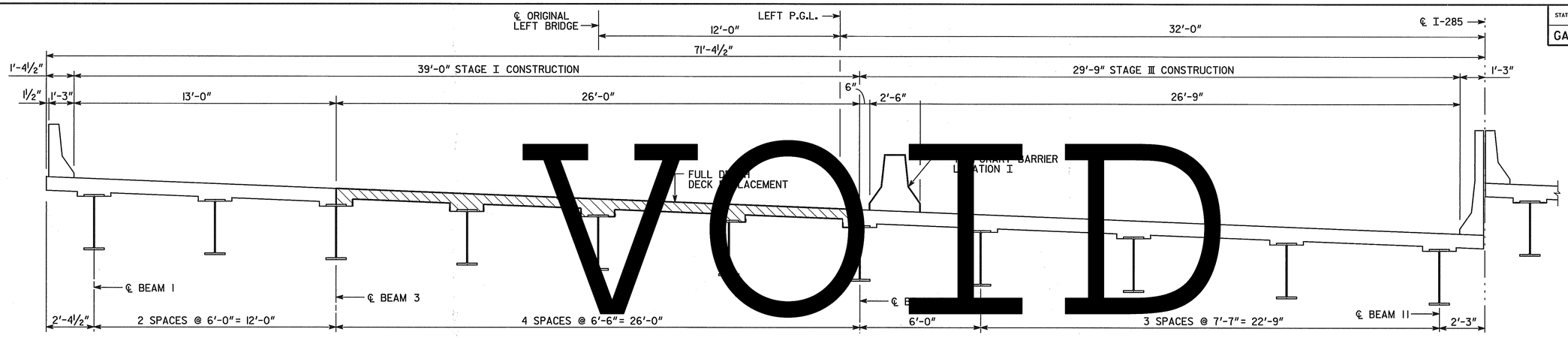

VOID

PARTIAL DECK SECTION

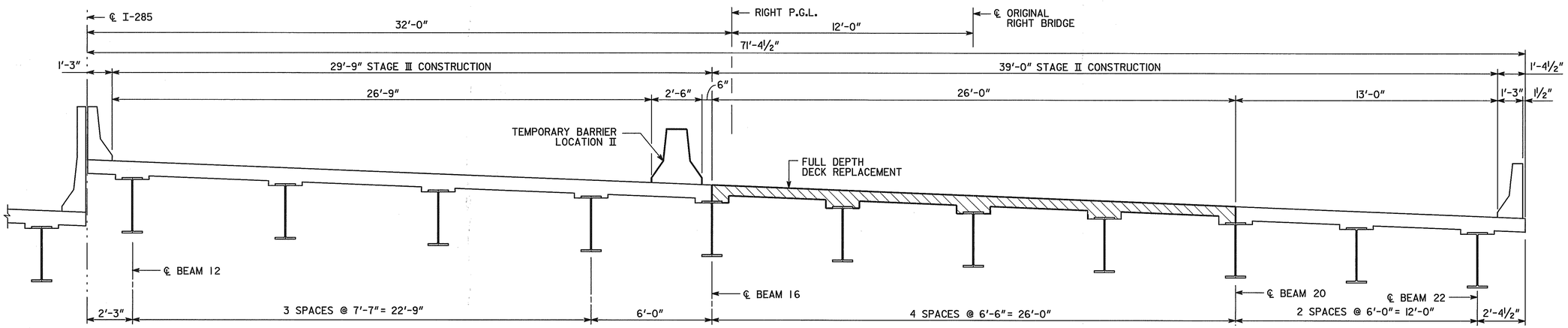

PARTIAL DECK SECTION

SUMMARY OF QUANTITIES

PAY ITEM NUMBER	QUANTITY	UNIT	PAY ITEM
449-1620	142	LF	LOW-DENSITY, CLOSED-CELL, X-LINKED, ETHYLENE VINYL ACETATE, POLYETHYLENE COPOLYMER, NITROGEN-BLOWN SEAL, BR NO-1, BENT NO-1
449-1620	142	LF	LOW-DENSITY, CLOSED-CELL, X-LINKED, ETHYLENE VINYL ACETATE, POLYETHYLENE COPOLYMER, NITROGEN-BLOWN SEAL, BR NO-1, BENT NO-2
449-1620	142	LF	LOW-DENSITY, CLOSED-CELL, X-LINKED, ETHYLENE VINYL ACETATE, POLYETHYLENE COPOLYMER, NITROGEN-BLOWN SEAL, BR NO-1, BENT NO-3
449-1620	142	LF	LOW-DENSITY, CLOSED-CELL, X-LINKED, ETHYLENE VINYL ACETATE, POLYETHYLENE COPOLYMER, NITROGEN-BLOWN SEAL, BR NO-1, BENT NO-4
449-1620	142	LF	LOW-DENSITY, CLOSED-CELL, X-LINKED, ETHYLENE VINYL ACETATE, POLYETHYLENE COPOLYMER, NITROGEN-BLOWN SEAL, BR NO-1, BENT NO-5
501-3000	LUMP	LS	STR STEEL, BR NO-1 (17606)
504-0600	117	CY	TWENTY-FOUR HOUR ACCELERATED STRENGTH CONC
505-1100	12636	SF	COMPOSITE STEEL GRID DECK WITH PRECAST CONCRETE SLAB
511-3000	LUMP	LS	SUPERSTR REINF STEEL, BR NO-1 (14820)
519-0515	3713	SY	SURFACE PREPARATION
519-0520	3713	SY	COPOLYMER OVERLAY
521-1000	105	SF	PATCHING CONCRETE BRIDGE DECK
540-1202	LUMP		REMOVAL OF PARTS OF EXISTING BR, BR NO-1

WORK CONSISTS OF

1. REMOVAL OF EXISTING EDGE BEAMS AT BENTS 2, 3 AND 4 AND MODIFICATION OF THE ENDWALLS AT BENTS 1 AND 5.
2. REPLACEMENT OF EXISTING CONCRETE DIAPHRAGMS IN ORIGINAL DECK SECTION WITH NEW STEEL DIAPHRAGMS.
3. REMOVAL OF THE DECK SLAB AND EDGE BEAMS BETWEEN BEAMS 3 TO 7 AND BETWEEN BEAMS 16 TO 20 AND REPLACEMENT WITH PRECAST CONCRETE STEEL GRID DECK PANELS.
4. INSTALLATION OF A COPOLYMER OVERLAY OVER THE ENTIRE DECK SURFACE.

DESIGN DATA

SPECIFICATIONS ---------- AASHTO 1996 INCLUDING 1997 THROUGH 2002 INTERIMS

TYPICAL HS20-44 AND/OR MILITARY LOADING ---------- IMPACT INCLUDED

FUTURE PAVING ALLOWANCE ---------- 30 LBS PER SQ FT

CONCRETE:
- DECK SLAB ..... 24 HOUR ACCELERATED STRENGTH f'_c = 3,500 PSI
- EDGE BEAMS ..... 24 HOUR ACCELERATED STRENGTH f'_c = 3,500 PSI
- ENDWALLS .....24 HOUR ACCELERATED STRENGTH f'_c = 3,500 PSI
- CLOSURE POURS.....24 HOUR ACCELERATED STRENGTH f'_c = 3,500 PSI

REINFORCEMENT STEEL ---------- GRADE 60, f_y = 60,000 PSI

DECK PANELS:
- PRECAST CONCRETE DECK ..... f'_c = 4,000 PSI
- REINFORCING STEEL ..... EPOXY COATED, GRADE 60, f_y = 60,000 PSI
- STRUCTURAL STEEL ..... ASTM A992, GRADE 50, GALVANIZED

BRIDGE NO. 1

J.B. TRIMBLE, INC.
6445 Powers Ferry Rd.
Atlanta GA 30339
(770) 952-1022

GEORGIA
DEPARTMENT OF TRANSPORTATION
OPERATIONS DIVISION-OFFICE OF MAINTENANCE

DISTRICT 7 BRIDGE REPAIR (DECK REHABILITATION)
I-285 OVER S.R. 3 (U.S. 41)
CONSTRUCTION SEQUENCE

COBB COUNTY NHS-M002-00 (136)

SCALE: NO SCALE U.N.O. APRIL 2004

BY	REVISIONS	DATE

BRIDGE SHEET 2 OF 7

DESIGNED PJC | CHECKED GLE | REVIEWED EHG
DRAWN ITD | DESIGN GROUP MAINTENANCE | APPROVED STH

C:\DGN\313029\136\BRI\136BI CS.DGN 11-18-03 ITD

...\136sts.dgn 6/30/2004 1:42:02 PM